UL Online Certifications Directory

BXUV.D739
Fire Resistance Ratings - ANSI/UL 263

Page Bottom

Fire Resistance Ratings - ANSI/UL 263

See General Information for Fire Resistance Ratings - ANSI/UL 263

Design No. D739

June 06, 2006

Restrained Assembly Ratings — 1, 1-1/2, 2, 3 and 4 Hr

(See Items 2B, 3, 3A, 6 and 8)

Unrestrained Assembly Ratings — 0, 1, 1-1/2, 2, 3 and 4 Hr.

(See Items 2B, 3, 3A and 8)

Unrestrained Beam Ratings — 1, 1-1/2, 2, 3 and 4 Hr.

(See Items 2B, 3, 3A and 8)

Load Restricted for Canadian Applications — See Guide BXUV7

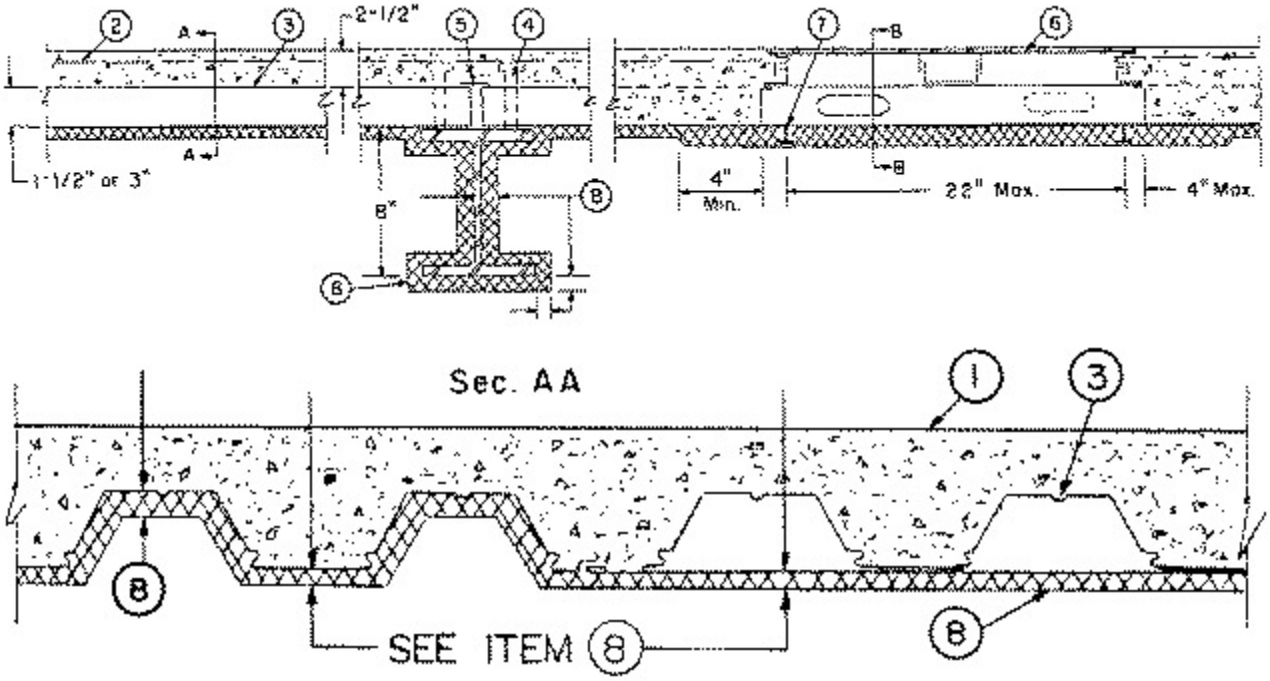

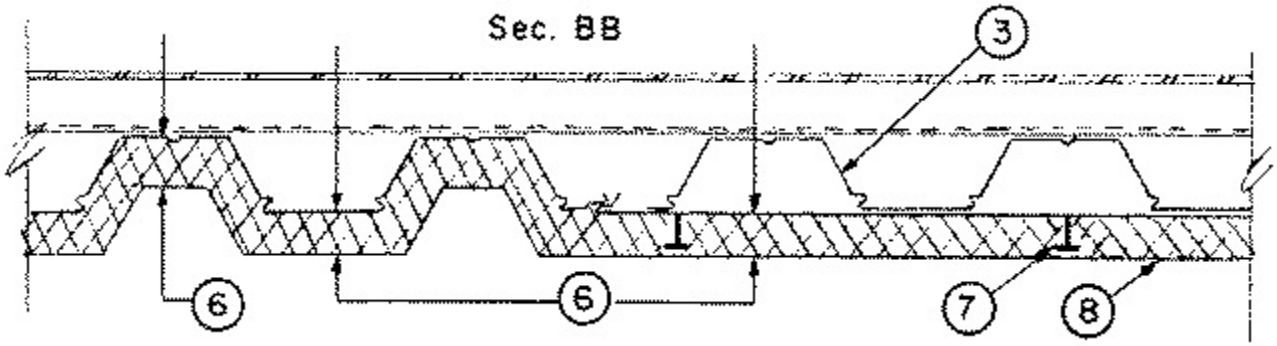
Sec. BB
3
6
6
7
8

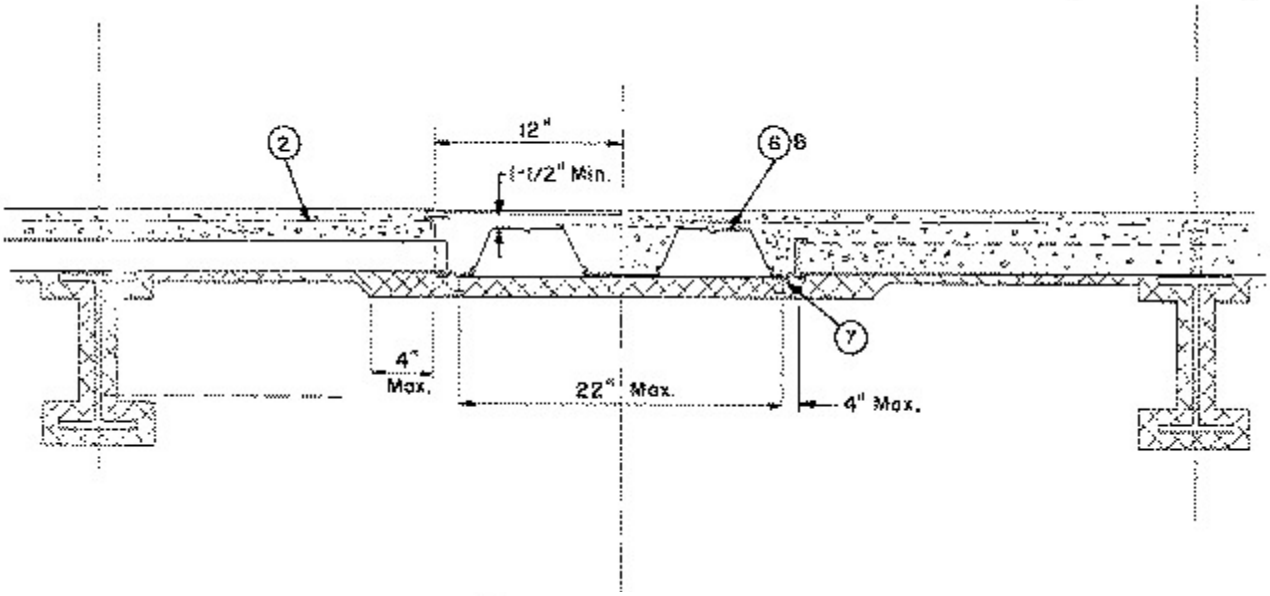
2
12"
1-1/2" Min.
6 8
7
4" Max.
22" Max.
4" Max.

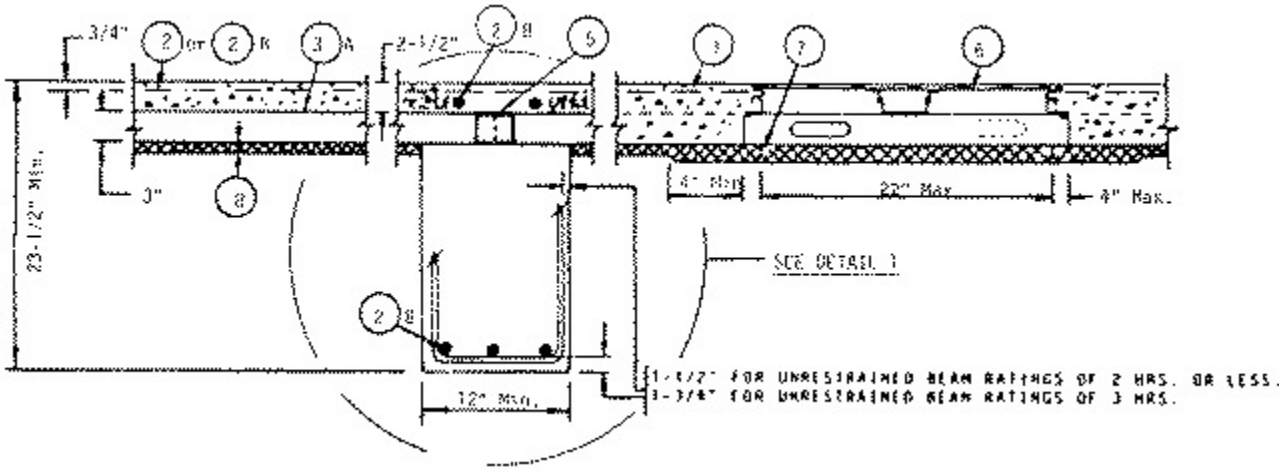
3/4"
2 or 2 B
3 A
2-1/2"
2 B
5
1
7
6
23-1/2" Min.
3"
8
4" Min.
22" Max.
4" Max.
SEE DETAIL 1
2 B
12" Min.
1-1/2" FOR UNRESTRAINED BEAM RATINGS OF 2 HRS. OR LESS.
1-3/4" FOR UNRESTRAINED BEAM RATINGS OF 3 HRS.

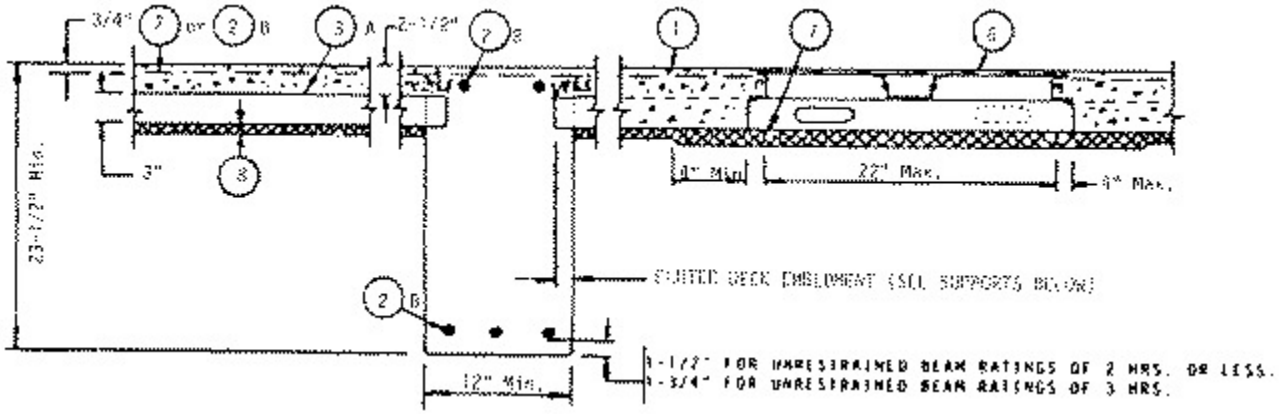
3/4"
2 or 2 B
3 A
2-1/2"
2 B
1
7
6
23-1/2" Min.
3"
8
4" Min.
22" Max.
4" Max.
FLUTED DECK EMBEDMENT (SEE SUPPORTS BELOW)
2 B
12" Min.
1-1/2" FOR UNRESTRAINED BEAM RATINGS OF 2 HRS. OR LESS.
1-3/4" FOR UNRESTRAINED BEAM RATINGS OF 3 HRS.

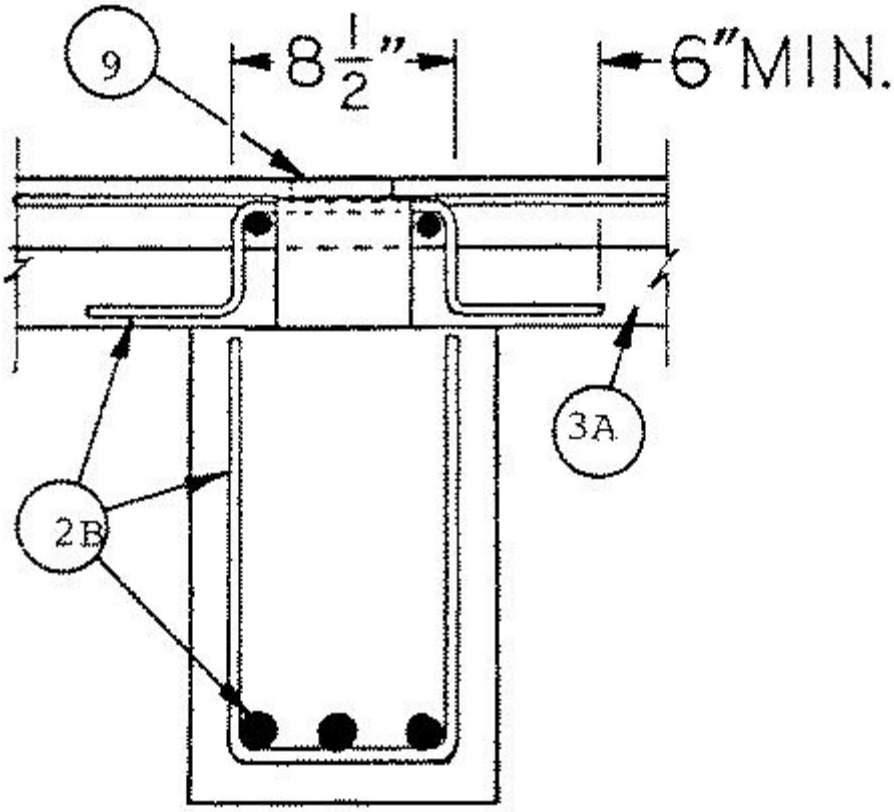

DETAIL 1

Supports — W8x28 or W6x12 min size steel beams, or steel joists, composite or noncomposite. Steel joists shall be welded to end supports. Min area of joist members shall be 1.44 sq in. for top chord angles, 0.87 sq in. for bottom chord members and 0.47 sq in. for web members. Bridging angles required for noncomposite steel joist, min 1-1/4 in. by 1-1/4 in. by 1/8 in. thick. Welded to the top and bottom chords of steel joists. The l/r ratio for horizontal bridging shall not exceed 300. Bridging sizes and number of rows shall be in accordance with Steel Joist Institute Specifications. See Item 8.

For 3 Hr or less Restrained and Unrestrained Assembly and Unrestrained Beam Ratings, as alternate to steel beams or steel joists, cast in place reinforced concrete beams or girders designed in accordance with the provisions of the Building Code Requirements for Reinforced Concrete (ACI 318-89), may be used as supports for the 3 in. deep floor units. See Item 3A. Min width and depth of concrete beams shall be 12 and 23-1/2 in. respectively.

Fluted steel floor units shall be embedded in the concrete beams a min of 0.0139 times the clear span or 1-1/2 in., whichever is greater. The cellular units may be continuous or with a butted end joint centered over the concrete beam. For continuous floor spans, negative moment reinforcement for the slabs is required over the supporting beams.

1. **Normal Weight or Lightweight Concrete —** Normal weight concrete, carbonate or siliceous aggregate, 145 pcf plus or minus 3 pcf unit weight, 3000 psi compressive strength, vibrated. Lightweight concrete, expanded shale, clay or slate aggregate by rotary-kiln method, 102-120 pcf unit weight (110 pcf unit weight for use with steel joists), 3000 psi compressive strength, vibrated, 4 to 7 percent entrained air.

2. **Welded Wire Fabric —** 6x6 — W1.4xW1.4. When using steel joists, the min welded wire fabric shall be 6x6 — W2.9xW2.9.

2A. **Fiber Reinforcement* —** As an alternate to Item 2, engineered synthetic fibers added to concrete mix to control shrinkage cracks in concrete. Fibers added to concrete mix at a rate of 1.0 lb of fiber for each cu yard of concrete.

W R GRACE & CO - CONN

CONSTRUCTION PRODUCTS DIV

2B. **Reinforcement —** Deformed bars of grade 60 steel, for use in floors supported by reinforced concrete beams or girders. Min size No. 3 bars for use as negative reinforcement or vertical stirrups for beams, girders or slabs. Min No. 5 bars for use as positive reinforcement for beams or girders.

Min net concrete cover on the beam or girder bottom reinforcements, shall be 1-1/2 in. for Restrained Assembly Ratings up to 3 Hr and Unrestrained Assembly and Beam Ratings up to 2 Hr. For 3 Hr Unrestrained Assembly and Beam Ratings, 1-3/4 in. cover is required. When continuous cellular units intersect the supporting concrete beams

(interrupting the beam stirrups), short pieces of additional stirrups shall be placed in the top part of the beam above the units.

3. **Steel Floor and Form Units* —** Composite 1-1/2, 2, or 3 in. deep galv units. Fluted units may be uncoated. Min gauges are 22 MSG for fluted and 20/20 MSG for cellular. Any combination of fluted and cellular units may be used.

ASC STEEL DECK, DIV OF ASC PROFILES

INC — 24 in. wide Types B-24, BF-24, N, NF, 2W24, 2WF24, 3W24, 3WF24; 30 in. wide Types B-30, BF-30; 36 in. wide Types B-36, 2W36, 2WF36, 3W36, 3WF36; 24 or 30 in. wide Types ASC2, ASC3.

CANAM STEEL CORP — 36 in. wide Type P-3623 composite.

CONSOLIDATED SYSTEMS INC — 24 in. wide Types CFD-2, -3; 24, 30 or 36 in. wide Type CFD-1.5; 12, 24 or 36 in. wide Types Mac-Lok 2, Mac-Lok 3; 12 in. wide Mac-Way Cellular Types 2-633MTWA, 3-633MTWA, 2-633MTWV, 3-633MTWV. For the 1, 1-1/2, 2h Restrained Assembly Ratings and the 1h Unrestrained Assembly and Beam Rating, 12 in. wide, Type 1.5-633 MTWA may be used. Types CFD-1.5, CFD-2, CFD-3, Mac-Lok 2, Mac-Lok 3 may be phos/ptd. Two rows of steel studs with discs (Item 7) shall be welded along the sides of the Types 2-633MTWV, 3-633MTWV cellular units a max of 22 in. OC.

DECK WEST INC — 36 in. wide Type 2-DW, 3-DW, B-DW or BA-DW, units may be welded or fastened together with No. 10 self-drilling, self-tapping screws 60 in. OC. The length of the screws shall be sufficient to fully penetrate adjacent floors units.

EPIC METALS CORP — 24 in. wide Type EC366; 24 or 30 in. wide, Types EPC2, EPC3; 36 in. wide Type EC266.

GENS METALS INC — 12, 24 or 36 in. wide Types LF2, LF3. 24, 36 in. wide Types LF2, LF3 may be welded or fastened together with min 1 in. long No. 10 self-drilling, self-tapping steel screws spaced 36 in. OC Types LF2, LF3 units may be phos/ptd.

H H ROBERTSON — QL Types 24 in. wide 2 in. QL-99, AKX, AKD; 24 in. wide 3, NKX, UKX; 24 or 36 in. wide 2 or 3 in. 99, AKD, AKX, WKD, WKX, TKX, 3 in. QL-WKD, -WKX, 24 or 30 in. wide, 3 in. QL-QKX, -GKXH, -GKX-A 24 in. wide QL-3, QL-UKX; units may be welded or fastened together with No. 10 self-drilling, self-tapping screws 60 in. OC. The length of the screws shall be sufficient to fully penetrate adjacent floor units.

CHIA TEH CONSTRUCTION MATERIAL CO LTD — 24 or 36 in. wide Mac-Lok 3; 24 in. wide CFD-3.

KAM INDUSTRIES LTD, DBA CORDECK — 3KA1F24, 3KF30 or 3P30. Type 3P30 unit may be phos/painted.

MARLYN STEEL DECKS INC — Type 1.5 CF, 2.0 CF or 3.0 CF.

NEW MILLENNIUM BUILDING SYSTEMS L L C — Type 1.5CD, 2.0CD, or 3.0CD

MORIN CORP — 24, 30 or 36 in. wide, Type LXR-B; 24 or 36 in. wide Type LXR-3W; 36 in wide LXR-2W.

UNITED STEEL DECK INC — 24, 30 or 36 in. wide Types BL, BLC; 12, 24 or 36 in. wide Type LF1.5, LF2, LF3, LFC1.5, LFC2 or LFC3; 32 in. wide Type LFC3+; 24 in. wide Types N-Lok, NLC for max 2 hr Restrained Assembly Rating, 12 or 24 in. wide Types AWC2 or AWC3+++ may be used. Types 24, 36 in. wide LF2, LF3, LFC2, LFC3 may be welded or fastened together with min 1 in. long No. 10 self-drilling, self-tapping steel screws 36 in. OC. Type AWC units may be button-punched, welded or screw fastened together with min 1 in. long No. 12 self-drilling, self-tapping steel screws spaced a max 42 in. OC. Types BL, LF2, LF3, NL units may be phos/ptd.

VERCO MFG CO — 24, 30 or 36 in. wide Types PLB , B, BR; 24 or 36 in. wide Types PLW2 , W2, PLW3 , W3; 24 in. wide Types PLN , N. Units may be phos/ptd.

VULCRAFT, DIV OF NUCOR CORP — 24, 30 or 36 in. wide Types 1.5VL , 1.5VLI, 1.5VLP; 24 or 36 in. wide Types 2VLI, 3VLI, 2VLP, 3VLP. Types 1.5VLI, 2VLI,3VLI units may be phos/ptd; 24 or 36 in. wide Types 2VLJ, 3VLJ units+++++ may be used for max 2 hr Restrained Assembly Rating.

WIREMOLD CO — 24 in. wide Type WDR2, WDR2-2, WDR3 or WDR3-2 cellular units ++++.

WHEELING-PITTSBURGH STEEL CORP, DIV

OF WHEELING CORRUGATING CO — 30 in. wide galv or phosphatized/painted Types SB150, -150N, 150NR, -150R; 30 or 36 in. wide galv Types SB-B16LF, -B16LFR; 12, 24 or 36 in. wide galv Types SB-P21LF, -P31LF; 24 in. wide Type SB200 or -300. Lock Form Type, 12, 24 or 36 in. wide Types C20LF, C30LF, C31LF, P20LF, P30LF, P31LF; 24 in. wide Types C34LF, P34LF; 30 or 36 in. wide Type B16LF; 36 in. wide Types 1.5 SB, 1.5 SBR; 24 or 36 in wide Types 2.0 SB, 3.0 SB. Units may be phos/ptd. 24 or 36 in. wide Types 212V-Grip, 312V-Grip; 36 in. wide Types 212VW3-Wireway, 312VW3-Wireway; 30 or 36 in. 1-1/2 V-Grip. Types 1-1/2 V-Grip, 212V-Grip and 312V-Grip, may be phos/ptd.

Spacing of welds attaching units to supports shall be 12 in. OC max. unless specified otherwise, adjacent units button-punched or welded together at side joints and, unless specified otherwise for specific unit types, spacing of all side joint fastening systems shall not exceed 36 in. OC.

+32 in. wide, 20/20 min ga Lok-Floor Cell is limited to a blend of one cellular to one or more fluted units. Spans incorporating trench headers may use a blend of one 32 in. wide, 20/20 min ga Lok-Floor cellular unit to one 24 in. wide cellular unit or one or more fluted units, with stud pins and discs (see item 7) required below the cellular units.

+++Assembly may consist of all Type AWC cellular units or any blend of AWC2 or AWC3 cellular units and Types LF2 or LF3 fluted units. Allowable loading for the floor shall be based upon published loading tables for the fluted units.

++++Types WDR2, WDR3 cellular units shall be blended one cellular to one or more 24 in. wide fluted units. Adjacent units to be welded together at side joints max 36 in. OC. Allowable loading for the floor shall be based upon published loading tables for the fluted units.

+++++Side joints of Types 2VLJ or 3VLJ units may be fastened together with No. 8-3/4 in. long self-drilling Tek screws driven diagonally from the top side through the joint of the units at 36 in. O. C. max.

3A. **Steel Floor and Form Units* —** (for alternate cast in place concrete beams) — Composite 3 in. deep galv units. Fluted units may be uncoated. Min gauges are 20 MSG for fluted and 20/20 MSG for cellular. The ratio of blended units shall not exceed one 24 in. wide cellular unit to 36 in. wide fluted unit for the cast in place concrete frame buildings.

CHIA TEH CONSTRUCTION MATERIAL CO LTD — 24 or 36 in. wide Mac-Lok 3; 24 in. wide CFD-3.

H H ROBERTSON — QL Types 24 or 36 in. wide 3 in. 99, 24 or 30 in. wide 3 in. QL-GKX, -GKXH, QL-GKX-A; units may be welded or fastened together with No. 10 self-drilling, self-tapping steel screws 60 in. OC. The length of the screws shall be sufficient to fully penetrate adjacent floor unit.

4. **Shear Connectors —** (Optional)-Studs, 3/4 in. diam (min 1/2 diam for use with steel joists) by 4-1/2 in. long, headed type or equivalent per AISC specification. Welded to the top flange of the beam, or top chord of the steel joist, through the deck.

5. **Joint Cover —** 2 in. wide pressure sensitive cloth tape.

6. **Trench Header —** Trench header (Bearing the UL Listing Mark), without the bottom pan. The allowable superimposed load for spans with bottomless trench shall be based on noncomposite design. This trench header, ranging in width from min 12 in. to max 36 in., consists of two cell closers which conform to the contour of the floor units, placed along the sides of the desired trench location and welded to the floor units. The side rails, consisting of extruded aluminum screens secured to galv steel channels (min 18 MSG) are positioned over the cell closers, aligned and welded or riveted to the closers and floor units. A separate U shaped channel (min 18 ga) serving as the power compartment, is welded or riveted to the floor units. Steel cover plates, 1/4 in. thick shall be secured to the side rails. In bottomless trench headers wider than 18 in., each steel cover plates, 1/4 in. thick shall be secured to the side rails. In bottomless trench headers wider than 18 in., each side joint of the steel floor units shall be welded together with a 1 in. long weld near the trench header centerline. For QL-GKX-24 or -30 cellular floor units only, a separate KED-PTS (UL Listed) power transition sleeve is secured to power compartment with one rivet or screw.

The use of this trench requires the use of steel studs with discs (Item 7) and additional protection underneath the trench. Fireproofing thickness shall be increased as shown in the following table:

Restrained	Spray Applied Fire Resistive Mtl Thk In

Assembly Rating Hr	Crests	Valley	Flat Plate
1 hr	1-3/16	1	1+
1-1/2 hr	1-1/2	1-1/4	1-1/4
2 hr	1-3/4*	1-5/8*	1-5/8*
3 hr	2-1/4	2-1/8	2-1/8

These thicknesses shall extend a min of 4 in. beyond the edges of the trench header.

+When Spatterkote is used, for the **1 Hr Restrained Assembly Rating,** the thickness of the Spray-Applied Fire Resistive Materials on the flat plate shall be increased to 1-3/4 in. and the steel studs with discs (Item 7) may be omitted.

*When Type AWC units are used, Spray-Applied Fire Resistive Materials thickness shall be 2 in. in the crests and 1-3/4 in on valleys and flat plates for 2 Hr Restrained Assembly Rating.

6A. **Trench Header —** (Not shown) — With bottom pan. (Bearing the UL Listing Mark). Optional and as an alternate to trench header without the bottom pan (Item No. 6), for 2 Hr or less assembly ratings. Housing constructed of steel with metal edge screeds. The thickness of Spray-Applied Fire Resistive Materials on floor units below this trench header is dependent on concrete unit weight as follows: (1) For concrete unit weight range of 105 to 112 pcf the required thickness of Spray-Applied Fire Resistive Materials is 1-1/8in. below the bottom plane of the units with flutes completely filled, except for 2 in. and 3 in. deep floor units, where thickness in flutes shall be 1-1/8 in. (2) For concrete unit weight of 112 pcf or higher and normal weight concrete the required thickness of Spray-Applied Fire Resistive Materials is 7/8 in. below the bottom plane of the units with flutes completely filled, except for 2 in. and 3 in. deep floor units, where thickness in flutes shall be 1-1/8 in. Types AWC, WDR2, WDR2-2, WDR3, WDR3-2 cellular units require the use of steel studs with discs (Item 7). The greater thickness of Spray-Applied Fire Resistive Materials below the trench header shall extend a min of 5 in. beyond the edges of the trench header.

6B. **Feeder Duct System —** (As an alternate to Items 6 or 6A). Consists of 3 in. deep, nom 24 in. wide, 20/18 MSG Type QL-WKM or QL-WKM-E cellular steel floor unit (feeder duct) and nom 24 by 24 in. junction boxes. The valley between the two cells of the feeder duct may or may not be covered by a steel plate to form a third cell. Feeder duct installed at the same elevation and perpendicular to 2 or 3 in. deep fluted and/or cellular steel floor units which are cantilevered from support beams on one or both sides of the feeder duct. The junction boxes consisting of extruded aluminum screeds, 18 galv steel outside flute closures, 16 galv steel compartment divider, and 0.21 in. thick steel cover plate are used at intersections of 2 or 3 in. cellular units and the feeder duct, where desired. Bottom tabs of the flute closures are fastened to the valleys of the 2 or 3 in. units and to the feeder duct with self-drilling tek fasteners, while the cover plate is retained in position by four latch clips, one near each corner of the plate. The height and the level of the aluminum screed are adjusted by four adjustment screws, two each on opposite sides. In between the junction boxes the ends of the 2 or 3 in. fluted and/or cellular units are covered with steel end closure angles tack-welded to the top of the units.

Welded wire fabric (Item 2) extends over the feeder duct between junction boxes. The allowable superimposed load for spans with the feeder duct system shall be based on noncomposite design. Steel studs with discs (Item 7) shall be welded to the underside of the feeder duct in two rows. The spacing between rows shall not exceed 22 in. OC and the spacing of studs in each row shall not exceed 24 in OC. The use of this feeder duct system requires additional protection underneath the feeder duct. Fireproofing thickness shall be increased to 1-3/4 in. for 2 Hr Restrained Assembly Rating and 1-1/2 in. for 1-1/2 Hr Restrained Assembly Rating. These thicknesses shall extend a min of 4 in. beyond the edge of the feeder duct.

H H ROBERTSON — 24 in. wide Type QL-WKM or WL-WKM-E.

6C. **Trench Header —** (Bearing the UL Listing Mark) with an intermittent bottom. The allowable superimposed load for spans with an intermittent bottom trench header shall be based on noncomposite design. The intermittent bottom trench header, with a max width of 36 in., consists of a horizontal closure plate (min 22 MSG) over the fluted deck sections at the desired trench header location and affixed to the floor units by welding or screws (No. 14 by 3/4 in. long self-tapping, self-drilling). The side rails consist of extruded aluminum screeds secured to galv steel channels (min 18 MSG), positioned over the edge of the horizontal closure plates, aligned, and welded to the cells and fluted floor units. A separate U-shaped galv steel channel (min 18 MSG), serving as the power compartment, is welded to the horizontal closure plates and floor units. Steel cover plates, 1/4 in. thick, shall be screw-attached to the side rails. For intermittent bottom trench headers wider than 24 in., each side joint of the steel floor units inside the trench header, shall be screwed together with No. 14 by 3/4 in. long, self-tapping, self-drilling steel screw or welded together with 1 in. long weld near the trench header centerline. This trench header requires the use of steel studs with discs (See Item 7) and additional protection underneath the trench. Fireproofing thickness for 24 in. wide intermittent bottom trench headers shall be increased to 1-1/8 in. in the crests and on the valleys and flat plates for the 1, 1-1/2 or 2 Hr **Restrained Assembly Ratings** with normal weight or light weight concrete. Fireproofing thickness for 36 in. wide intermittent bottom trench headers shall be increased to 2 in. in the crest; 1-3/4 in. on valleys and flat plates for 2 Hr Restrained Assembly rating; 1-3/4 in. in the crest, 1-1/2 in. on valleys and flat plates for 1-1/2 H Restrained Assembly rating; 1-1/2 in. in the crest, 1 in. on valleys and flat plates for 1 Hr Restrained Assembly rating with normal weight or lightweight concrete. These thicknesses shall extend a min of 4 in. beyond the edge of the trench header.

6D. **Trench Header —** (Bearing the UL Listing Mark) with an Intermittent Bottom Storage, max 36 in. width, for

use with Mac-Way Cellular Units. A 16 in. length of the top hat-shaped cover of the Mac-Way Cellular Unit is cut away in the center of the trench header and each end of unit at the cut out is reinforced with 4 by 11 in., 16 ga. galv steel plate spot-welded to the top of each side compartment. The center 16 in. length of the center channel compartment is covered by a 16 ga. galv steel channel placed over and welded to the center channel compartment forming a box. The cover channel is also welded with a full length fillet weld to the top 4 X 11 in. reinforcing plates on the top cut ends of the unit.

A power compartment channel of 18 MSG galv steel is placed on top and perpendicular to the floor units and centered along the longitudinal centerline of the trench header. The channel is attached to the closure plates over the fluted units with tek screws and is tack-welded to the center compartment Cover channel of the cellular unit. The end closures over the fluted units are made from a min 22 ga. galv steel. The power compartment channel made from 18 MSG galv steel with adjustable sides, is centered along the longitudinal centerline of the trench header. The sides are adjusted to support the cover plate. The side-rail assemblies consist of aluminum extrusion, and 14 MSG min galv steel support. The parts of the side-rails are secured together by leveling screws at 36 in. OC max. The cover plates are 1/4 in. thick enameled steel secured to side-rails with No. 10-24 screws located 3 in. from ends and at 12 in. OC max along the length of the plates.

The trench header requires the use of steel studs with discs (See item 7) and additional protection underneath the trench. The spacing of the steel studs with discs shall be as specified in item 3 for Mac-Way cells. Fireproofing thicknesses under the intermittent bottom storage trench header for the various Restrained Assembly Ratings shall be as follows: 2 in. in the crest; 1-3/4 in. on valleys and flat plates for 2H Restrained Assembly rating; 1-3/4 in. in the crest; 1-1/2 in. on valleys and flat plates for 1-1/2 H Restrained Assembly rating; 1-1/2 in. in the crest; 1 in. on valleys and flat plates for 1H Restrained Assembly rating with normal weight or lightweight concrete. These thicknesses shall extend a min of 4 in. beyond the side edges of the trench header.

7. **Steel Studs With Discs —** The stud consists of No. 12 SWG galv steel wire, 1-3/8 in. long (2-1/8 in. long in 3 or 4 HR Restrained Assembly Rating) with one end welded to 1-3/16 in. diam, No. 28 MSG galv steel disc. The total number of studs shall avg at least one stud per 236 sq in. of cellular floor units beneath the trench header. The ends of the studs opposite the discs shall be welded to the cellular floor units in rows running parallel with the trench header. The distance between the outer rows of the studs and the edge of the trench header shall not exceed 4 in. The spacing between the rows shall not exceed 22 in. The spacing between studs in each row shall not exceed 24 in. When Type AWC cellular units are used, the total number of studs shall avg. at least one stud per 132 sq. in. of cellular floor units beneath the trench header. The ends of the studs opposite the discs shall be welded to the cellular floor units in rows running parallel with the trench header. The distance between the outer rows of the studs and the edge of the trench header shall not exceed 2 in. The spacing between the rows shall not exceed 8-1/2 in. The spacing between studs in each row shall not exceed 16-3/4 in.

When 24 in. wide Type WDR2, WDR2-2, WDR3 or WDR3-2 cellular units are used, the total number of studs shall avg. at least one stud per 172 sq. in. of cellular floor units beneath the trench header. The ends of the studs opposite the discs shall be welded to the floor units in rows running parallel with the trench header. The distance between the outer rows of the studs and the edge of the trench header shall not exceed 4 in. The spacing between studs in each row shall not exceed 18 in.

8. **Spray-Applied Fire Resistive Materials* —** Applied by mixing with water and spraying to steel surfaces which must be clean and free of dirt, loose scale and oil. When steel deck is used, the area between the steel deck and the beams top flange shall be filled. Min avg and min ind density of 15/14 pcf respectively. Min avg and min ind density of 22/19 pcf respectively for Types Z-106 and Z-106/G. Min avg and min ind density of 40/36 pcf respectively for Z-146. Min avg and min ind density of 19/18 pcf respectively for Types 7GP and 7HD. Application to steel deck with Z-146 requires the installation of expanded metal lath. See Item 11B. For method of density determination, refer to Design Information Section. Types 4, 5GP, 7GP, 7HD, 8GP, 9GP, MK-4 may be used only in general floor areas without concrete penetrations with all fluted steel floor units or blends consisting of one or more fluted units to one 24 in. wide max cellular unit, 1-1/2 or 3 in. deep, with cells spaced approx 6 and 8 in. respectively. Type Z-106 may be used only in general floor areas without concrete penetrations with all fluted steel floor units. Use of a spatter coat Types DK, DK2, DK3, SK-1 or SK-III is required on all cellular units with flat plate on the bottom, optional on other steel surfaces. When Type WDR2, WDR2-2, WDR3 or WDR3-2 cellular units are blended with fluted units under a trench header, Types DK, DK2, DK3, SK-1 or SK-III is also required on fluted units. Thickness of the spatter coat is included in the total thickness of the protection material.

The thicknesses of material required on the steel beam for the various Unrestrained Beam Ratings and Restrained Assembly Ratings are shown in the following table:

Min Beam Size	Concrete Type	Min Thk In.	Unrestrained Beam Rating Hr	Restrained Assembly Rating Hr
W8X28	LW or NW	1/2(a)	1*	1, 1-1/2 or 2
W6X12	LW or NW	3/4(a)	1*	1, 1-1/2 or 2
W8X28	NW	3/4	1-1/2*	1, 1-1/2, 2 or 3
W8X28	LW	7/8	1-1/2*	1, 1-1/2, 2 or 3
W8X28	NW	7/8	2*	1, 1-1/2, 2, 3 or 4
W8X28	LW	1	2*	1, 1-1/2, 2, 3 or 4
W8X28	NW	1-1/4	3*	1, 1-1/2, 2, 3 or 4

W8X28	LW	1-9/16	3*	1, 1-1/2, 2, 3 or 4
W8X28	LW or NW	2	4	1, 1-1/2, 2, 3 or 4

*When Type AWC cellular units are used, max. 1 hr. Unrestrained Beam Rating.

(a)Type AWC units for use only with NW concrete with 3/4 in. protection on W8x28 beam and 1 in. protection on W6x12 beam.

The thickness of material required on the steel joist for the various ratings are shown in the following table:

Restrained Assembly Rating Hr	Unrestrained Beam Rating Hr	Type of Concrete Slab	Spray Applied Fire Resistive Mtl Thkns In. Joist & Bridging
1	1	NW or LW	1-1/8
1-1/2	1-1/2	NW or LW	1-1/2
2	2+	NW+	1-1/2
2	2	NW or LW	2-1/4
3	3	NW or LW	2-7/8

+Maximum joist spacing is limited to 3 ft-6 in..

For the general floor area without trench headers or electrical inserts, the following thicknesses of material are required on the steel floor units for the various Restrained and Unrestrained Assembly Ratings when steel beams are used:

Restrained Assembly Rating Hr	Unrestrained Assembly Rating Hr (a)	Min Required Unrestrained Beam Rating Hr	Min Thk in		
			Crests	Valley	Flat Plate
1(b)	0	1	0	0	0
1, 1-1/2 or 2	1, 1-1/2 or 2(e)	1, 1-1/2 or 2	3/8(c)	3/8	3/8
3	1-1/2, 2 or 3(e)	1-1/2, 2 or 3	11/16	1/2	1/2
4	2, 3 or 4(b)	2, 3 or 4	1-1/2	1-1/8	—
4	2, 3 or 4(f)	2, 3 or 4	1-7/16	13/16	—
4	2, 3 or 4(g)(h)	2, 3 or 4	—	—	1-1/8(j)
4	2, 3 or 4(g)(i)	2, 3 or 4	—	—	13/16(j)

(a)See above beam thicknesses for applicable Unrestrained Assembly and Unrestrained Beam Ratings.

(b)Floor constructed of lightweight concrete only.

(c)Min thickness of 1/2 in. is required in crests of 1-1/2 in. deep fluted units for the **2 Hr. Restrained Assembly Rating.**

(e)When Type AWC units are used the max **Unrestrained Assembly Rating** is 1 hr.

(f)Floor constructed of normal weight concrete only.

(g)Floor constructed of normal or light weight concrete.

(h)Steel floor unit depth of 2 in.

(i)Steel floor unit depth of 3 in.

(j)Steel studs with discs, as specified in Item 7, are required.

+For 2 Hr. Restrained Assembly Rating, the required thickness of protection material on Type AWC units is 1/2 in.

For the general floor area under a trench header, the following thickness of materials are required on the steel floor units for the various Restrainded and Unrestrained Assembly Ratings when steel beams are used:

Restrained	Unrestrained	Steel	Type of

Assembly Rating, Hr	Assembly Rating, Hr (a)	Floor Unit Depth, In.	Concrete Slab	Min Thk, in		
				Crests	Valley	Flat Plate
4	2, 3 or 4	2	NW	—	—	1-9/16 (a)
4	2, 3 or 4	3	NW	—	—	1-1/2 (a)

(a)Steel studs with discs, as specified in Item 7, are required.

ARABIAN VERMICULITE INDUSTRIES — Types MK-5, MK-6/CBF, -6/ED, -6/HY, -6s, SK-3, Sonophone-1, Sonophone-5, Sonophone-35 , Z-106, Z-106/G, Z-146 investigated for exterior use.

GRACE CANADA INC — Types MK-4, MK-5, Type SK-1.

W R GRACE & CO - CONN

CONSTRUCTION PRODUCTS DIV — Types MK-4, MK-5, MK-6/HY, MK-6s, RG, SK-3, Z-106, Z-106/G, Z-146 investigated for exterior use.

GRACE KOREA INC — Types MK-6/CBF, MK-6/ED, MK-6/HY, MK-6s, SK-3, Z-106, Z-106/G, Z-146 investigated for exterior use .

PYROK INC — Type LD.

SOUTHWEST FIREPROOFING PRODUCTS CO — Types 4, 5, 5EF, 5GP, 5MD, 7GP, 7HD, 8EF, 8GP, 8MD, 9EF, 9GP, 9MD, DK, DK2, DK3.

9. **Electrical Inserts —** (Not shown) — Preset and after set electrical inserts Classified as **Outlet Boxes and Fittings Classified for Fire Resistance** *. Unless specified otherwise for a particular preset electrical insert type, the spacing of the preset electrical inserts shall be not less than 24 in. on center along cellular steel floor units with not more than one preset electrical insert in each 4 sq ft of floor area. The required thickness of Spray-Applied Fire Resistive Materials on the steel floor units with inserts shall be sprayed the entire length and width of the units between supports and shall extend beyond the edge of inserts onto adjacent floor units for a minimum horizontal width of 12 in. In floor spans (between supports) containing electrical inserts, the entire floor span (fluted and cellular steel floor units) must be sprayed with a minimum 3/8 in. thickness of Spray-Applied Fire Resistive Materials.

(1) **H H Robertson** Inserts. (Tapmate III-FN, III-EAFN, III-EAFN-FC1; Series KEC).

Installed per accompanying installation instructions over factory-punched holes in QL-AKD or QL-WKD floor units. Inserts are used in the pre-active, active, or abandoned condition. Required spray-applied resistive material thicknesses on floor units with inserts are:

Floor Unit Type	Concrete Type	Min Spray Applied Fire Resistive Mtl Thk In.	Restrained Assembly Rating Hr
(Tapmate III-FN, III-EAFN)			
QL-AKD, -WKD	NW	3/8	1
QL-AKD, -WKD	LW	5/8	1
QL-AKD, -WKD	NW	1/2	1-1/2, 2
QL-WKD	LW	13/16	1-1/2,2
QL-AKD, -WKD	NW	3/4	3
(Tamate III-EAFN-FC1)			
QL-WKD	NW	1/2	2

The hole cut in insert cover for passage of wires shall be no more than 1/8 in. larger diam than the wire. For abandonment of Tapmate inserts, see installation instructions. Abandonment of Tapmate III-FN requires use of KEC-PC insert cover with no holes in it. Abandonment of Tapmate III— EAFN requires use of KEC-PC5 insert cover

with no holes in it and use of KEC-PC6 insert cover in lieu of either KEC-PC12 or -PC13 insert cover.

The Tapmate III insert may use KEB-HP-1; Series KEC outlet box fittings with the same hourly rating and fireproofing thicknesses as specified for the Tapmate III-EAFN electrical inserts.

(Tapmate II, II-EA, II-FN, II-EAFN)

Installed per accompanying installation instructions over factory-punched holes in QL-AKX or QL-WKX floor units. Inserts are used in the pre-active, active or abandoned condition. Required Spray-Applied Fire Resistive Materials thicknesses on floor units with inserts are:

Floor Unit Type	Concrete Type	Min Spray Applied Fire Resistive Mtl Thk In.	Restrained Assembly Rating Hr
(Tapmate II or II-EA)			
QL-AKX	NW	9/16	1
QL-AKX	LW	5/8	1
QL-AKX, -WKX	LW or NW	1/2	1
QL-AKX, -WKX	NW	11/16	11/2
QL-AKX, -WKX	NW	7/8	2
QL-AKX	LW	7/8	1-1/2 or 2
QL-WKX	LW	3/4	1-1/2 or 2
QL-AKX	NW	1-1/4	3
QL-AKX	LW	1-1/2	3
QL-WKX	NW	1-13/16	3
QL-WKX	LW	1-3/8	3
(Tapmate II-FN or II-EAFN)			
QL-AKX, -WKX	NW	3/8	1
QL-AKX, -WKX	LW	1/2	1
QL-AKX, -WKX	NW	1/2	1-1/2 or2
QL-WKX	LW	3/4	1-1/2 or 2
QL-AKX, -WKX	NW	3/4	3

The hole cut in insert cover for passage of wires shall be no more than 1/8 in. larger diam than the wire. For abandonment of Tapmate inserts, see installation instructions.

(Tapmate II-EAFN-FC1)

The Tapmate II-FN insert may use KEB-HP-1 outlet box fittings in lieu of the KEB-PC flush cover fittings.

Installed per accompanying installation instructions over factory-punched holes in QL-WKX floor units. Inserts are used in the pre-active, active, or abandoned condition. Required cementitious material thicknesses on floor units with inserts are:

Floor Unit Type	Concrete Type	Min Spray Applied Fire Resistive Mtl Thk In.	Restrained Assembly Rating Hr
QL-WKX	NW	3/8	1
QL-WKX	NW	1/2	1-1/2 or 2

For abandonment see installation instructions. Abandonment requires use of KEB-PC or -PCL insert cover with no holes in it (for all Tapmate inserts), or an abandonment plate for Tapmate II only, or a KEB-PC2 or -PC2-A1 abandonment cover for Tapmate II-EA and II-EAFN only.

(Tapmate IV, IV-EA, IV-H, IV-H-M, IV-S)

Installed per accompanying installation instructions over factory-punched holes in QL-GKX-24 or -30 floor units. Inserts are used in the preactive, active or abandoned condition. Required spray-applied resistive material thicknesses on floor units with inserts are:

Restrained Assembly Rating, Hr	Floor Unit Type	Concrete Type	Min Spray Applied Fire Resistive Mtl Thk In.
(Tapmate IV, IV-H, IV-H-M, IV-S)			
1	QL-GKX	NW, LW	3/8
1-1/2	QL-GKX	NW	1/2
1-1/2	QL-GKX	LW	9/16
2	QL-GKX	NW	5/8
2	QL-GKX	LW	3/4
3	QL-GKX	NW	1-1/4
3	QL-GKX	LW	1-1/2
(Tapmate V)			
1	QL-GKX	NW, LW	3/8
1-1/2	QL-GKX	NW, LW	1/2
2	QL-GKX	NW, LW	5/8
3	QL-GKX	NW, LW	1
(Tapmate IV-EA)			
1	QL-GKX	NW, LW	1/2
1-1/2	QL-GKX	NW	9/16
1-1/2	QL-GKX	LW	5/8
2	QL-GKX	NW	3/4
2	QL-GKX	LW	7/8

The holes cut in insert cover for passage of wires shall be no more than 1/8 in. larger diameter than the wire. For abandonment of inserts see installation instructions.

Type KED-HP-1 outlet box fittings may be used with Tapmate IV box assemblies or in lieu of Tapmate IV or IV-EA fittings with the same hourly ratings, insert spacings and protection material thicknesses as specified for the above electrical inserts.

(Tapmate IV, IV-FN-S, IV-FN-H, IV-EAFN)

Installed per accompanying installation instructions over factory-punched holes in QL-GKX-24 or -30 floor units. Inserts are used in the preactive, active or abandoned condition. Required spray-applied resistive material thicknesses on floor units with inserts are:

Restrained Assembly Rating, Hr	Floor Unit Type	Concrete Type	Min Spray Applied Fire Resistive Mtl Thk In.
(Tapmate IV-FN-S, IV-FN-H, IV-EAFN)			
1	QL-GKX	LW or NW	3/8
1-1/2	QL-GKX	NW	1/2
1-1/2	QL-GKX	LW	5/8
2	QL-GKX	NW	1/2
2	QL-GKX	LW	13/16
3	QL-GKX	NW	3/4

Type KED-HP-1 outlet box fittings may be used with Tapmate IV box assemblies or in lieu of Tapmate IV-FN-S, -IV-FN-H -IV-EAFN fittings with the same hourly ratings and protection material thicknesses as specified for the above electrical inserts.

The hole cut in insert cover for passage of wires shall be no more than 1/8 in. larger diameter than the wire. For abandonment see installation instructions.

(Tapmate KED-MSA Multi-Service After set Inserts)

Installed per accompanying installation instructions in core-drilled holes over QL-GKX-24 or 30 steel floor units. Spacing of after set inserts shall be not more than one insert per each 7-1/2 sq ft of floor area with not less than 25-1/2 in. between edges of adjacent after set inserts. After set inserts may be installed with either the flip lid plastic cover (KEC-PC3, PC4 & PC5 components) or the Deluxe Cover (KED-NAC type). Required Spray-Applied Fire Resistive Materials thicknesses of steel floor units with inserts are tabulated below:

Restrained Assembly Rating Hr	Floor Unit Type	Concrete Type	Min Spray Applied Fire Resistive Mtl Thkns In.
1	QL-GKX	NW, LW	3/8
1-1/2	QL-GKX	NW	1/2
1-1/2	QL-GKX	LW	9/16
2	QL-GKX	NW	5/8
2	QL-GKX	LW	3/4
3	QL-GKX	NW	1-1/4
3	QL-GKX	LW	1-1/2

H H ROBERTSON — Tapmate II, II-EA, II-FN, II-EAFN, II-EAFN-FC1; Series KEB. Tapmate III-FN, III-EAFN, III-EAFN-FC1; Series KEC. Tapmate IV, IV-EA, IV-EAFN, IV-FN-S, IV-FN-H, IV-H, IV-H-M, IV-S; Series KED. Tapmate KED-MSA

The following activated versions of Tapmate IV inserts may be installed with either the flip lip plastic cover (KEC-PC3, PC4 and PC5 components) or the Deluxe Cover (KED-NAC): Tapmates IV-S, IV-H, IV-H-M, IV-FN-S, IV-FN-H.

Only those Tapmate II, III or IV inserts having an FN suffix are required to contain the neoprene pad and then only in the activated stage.

(2) **Epic Metals Corp.** Inserts.

Installed per accompanying installation instructions over factory-punched holes in EPC2 or EPC3 floor units. Inserts are used in the pre-active, or abandoned condition. Required Spray-Applied Fire Resistive Materials thicknesses on floor units with inserts are:

Restrained Assembly Rating, Hr	Floor Unit Type	Concrete Type	Min Spray Applied Fire Resistive Mtl Thk In.
(EPC20-1, EPC30-1)			
1	EPC2 or EPC3	NW	9/16
1	EPC2 or EPC3	LW	5/8
2	EPC2 or EPC3	NW	7/8
2	EPC2 or EPC3	LW	1-1/16

Restrained Assembly Rating Hr	Floor Unit Type	Type of Actuation Fitting	Concrete Type	Min Spray Applied Fire Resistive Mtl Thk In.
(EPC20-2000, EPC30-3000)				
1	EPC2 or EPC3	EPC2030-DSAK	NW or LW	7/16
1-1/2	EPC2 or EPC3	EPC2030-DSAK	NW or LW	5/8

2	EPC2 or EPC3	EPC2030-DSAK	NW or LW	13/16
3	EPC2 or EPC3	EPC2030-DSAK	NW or LW	1-3/16
4	EPC2 or EPC3	EPC2030-DSAK	NW or LW	1-1/2
(EPC20-2000, EPC30-3000)				
1	EPC2 or EPC3	EPC2030-SSAK	NW or LW	3/8
1-1/2	EPC2 or EPC3	EPC2030-SSAK	NW or LW	9/16
2	EPC2 or EPC3	EPC2030-SSAK	NW or LW	11/16
3	EPC2 or EPC3	EPC2030-SSAK	NW or LW	1
4	EPC2 or EPC3	EPC2030-SSAK	NW or LW	1-5/16

The hole cut in insert cover for passage of wires shall be no more than 1/8 in. larger diam than wire.

For abandonment of EPC inserts, see installation instructions.

EPIC METALS CORP — Types EPC20-1, EPC30-1. Type EPC-2030-SAK activation fittings are used with both insert types. For Types EPC20-2000 and EPC30-3000, Types EPC2030-SSAK and EPC2030-DSAK activation fittings are used with both insert types.

(3) **United Steel Deck, Inc.** Inserts.

(Type 325 Preset Insert with Activation Fittings Types I, III, V, VI, or VII).

(Type 325-M1 and Type 325-M2 Preset Inserts with Activation Fitting Type X).

Installed per accompanying installation instructions over factory punched holes in Type AWC2 or AWC3 floor units. May be used for max 2 hr Restrained Assembly Rating only. For use with 12 or 24 in. wide AWC2 or AWC3 units. The holes cut in the insert cover for passage of wires shall be no more than 1/8 in. larger diam than the wire. For abandonment of insert see installation instructions.

Required Spray-Applied Fire Resistive Materials thickness on AWC2 or AWC3 units depends on the type of activation fitting and the hourly ratings, as follows:

Type of Activation Fitting	Restrained Assembly Rating Hr	Min Spray Applied Fire Resistive Mtl Thk In.
I, VI, VII or X	1, 1-1/2 or 2	1/2
III or V	1 or 1-1/2	1/2
V	2	5/8
III	2	11/16

(Type 325 preset insert with Activation Fittings Types I, III, V, VI or VII)

Required Spray-Applied Fire Resistive Materials thickness on AWC2 or AWC3 units for the 3 hour rating depends on the type of activation fitting as follows:

Type of Activation Fitting	Restrained Assembly Rating Hr	Min Spray Applied Fire Resistive Mtl Thk In.
I, III	3	15/16
V	3	7/8
VI	3	11/16
VII	3	13/16

Metal lath squares provided in 2 in. by 2 in. C-shaped sections attached to cellular floor unit flat plates by means of self-drilling, self-tapping steel screws and washers. The lath squares are to be located across and along the length of the cellular units, 6 in. OC apart in staggered rows.

(Types 350, 351- After set Inserts)

Installed per accompanying installation instructions in 4 or 4-1/4 in. diam hole, for Types 350 and 351 inserts, respectively, core-drilled through concrete topping, centered over top of cell of Type AWC2 or AWC3 cellular floor unit. Type 350 After set Inserts may be used for max 2 hr Restrained Assembly Rating in normal weight concrete floors. Type 351 After set Inserts may be used for max 2 hr. Restrained Assembly Rating in normal weight or lightweight concrete floors. Spacing of inserts shall be not more than one insert in each 4 sq. ft. of floor area with not less than 2 ft. on center between adjacent inserts. Required Spray-Applied Fire Resistive Materials thickness of 1/2 in. on cellular floor units with inserts.

UNITED STEEL DECK INC — After set insert Types 350, 351. Type 350DG or -DK fittings used for abandonment of Type 350 after set insert.

(4) **Wiremold Co.** and **Kam Industries Ltd d/b/a Cordeck** Inserts.

(PK Series Preset Inserts; FAKM-II, FPF, RAKM, RAKM-II, S36BB, S36BC, S36CC, S37BB, S37BC, S37CC, S36PB, S36PC Service Fittings or Type S3AXBP abandonment plate)

Installed per accompanying installation instructions over factory pre-punched knockouts or factory installed over pre-punched knockouts in Type WDR2 or WDR3 cellular steel floor units. When Type FPF, S36PB or S36PC Service fittings are used, furniture whip for power feed from service fitting cover to be liquid-tight steel conduit with cast steel 90 degree elbow connector. Refer to installation instructions for Classified Assemblies. Required Spray-Applied Fire Resistive Materials thicknesses on floor units with inserts are:

Restrained Assembly Rating Hr	Concrete Type	Min Spray Applied Fire Resistive Mtl Thkns In.
(Type FAKM-II)		
1	LW or NW	3/8
1-1/2	LW or NW	1/2
2	LW or NW	11/16
3	LW or NW	15/16
(Type RAKM, S37BB, S37BC, S37CC)		
1	LW or NW	7/16
1-1/2	LW or NW	5/8
2	LW or NW	7/8
(Type RAKM-II, S36BB, S36BC, S36CC, S3AXBP)		
1	LW or NW	3/8
1-1/2	LW or NW	7/16
2	LW or NW	5/8
3	LW or NW	1
(Type FPF, S36PB, S36PC)		
1	LW or NW	3/8
1-1/2	LW or NW	1/2
2	LW or NW	11/16
3	LW or NW	15/16

(NRG Bloc IV Preset Inserts: FAKM-II, FPF, RAKM, RAKM-II, RPF, S36BB, S36BC, S36CC, S37BB, S37BC, S37CC, S36PB, S36PC, S36PP, S37PB, S37PC, S37PP Service Fittings or Type S3AXBP abandonment plate)

The NRG Bloc IV preset insert is furnished by **KAM INDUSTRIES LTD d/b/a CORDECK.** The service fitting components are furnished by **WIREMOLD CO.** Installed per accompanying installation instructions over factory-punched holes in 3 in. deep K-Type cellular steel floor units (furnished by KAM INDUSTRIES LTD d/b/a CORDECK). When type FPF, RPF, S36PB, S36PC, S36PP, S37PB, S37PC or S37PP Service fittings are used, furniture whip for power feed from service fitting cover to be liquid-tight steel conduit with cast steel 90 degree elbow connector. The required Spray-Applied Fire Resistive Materials thicknesses on steel floor units with inserts are tabulated below:

Restrained Assembly Rating Hr	Concrete Type	Min Spray Applied Fire Resistive Mtl Thkns In.
(Type RAKM-II, S36BB, S36BC, S36CC, S3AXBP)		
1, 1-1/2	LW or NW	3/8
2	LW or NW	1/2
3	LW or NW	13/16
(Type FAKM-II)		
1	LW or NW	3/8
1-1/2	LW or NW	7/16
2	LW or NW	9/16
3	LW or NW	3/4
(Type FPF, S36PB, S36PC, S36PP)		
1	LW or NW	3/8
1-1/2	LW or NW	1/2
2	LW or NW	9/16
3	LW or NW	3/4
Restrained Assembly Rating Hr	**Concrete Type**	**Min Spray Applied Fire Resistive Mtl Thkns In.**
(Type RAKM, S37BB, S37BC, S37CC)		
1	LW or NW	3/8
1-1/2	LW or NW	7/16
2	LW or NW	11/16
(Type RPF, S37PB, S37PC, S37PP)		
1	LW or NW	3/8
1-1/2	NW	7/16
1-1/2	LW	9/16
2	NW	5/8
2	LW	3/4

(437 Series Preset/After set Inserts; S125R, S126R, S165B, S166B Fittings)

Single-service preset or after set inserts installed per accompanying installation instructions over Types WDR2, WDR2-2, WDR3 or WDR3-2 cellular steel floor units. When used as a preset insert, attaching ring with mud cap installed over 2-1/2 in. diam factory-punched or field-drilled hole in top of cell prior to concrete placement. When used as an after set insert, a 4 in. diam hole is core-drilled to, but not through, top of cell and attaching ring is installed over 2-1/2 in. diam hole drilled in top of cell concentric with core-drilled hole. Inserts may be installed individually or in clusters of two or three inserts at each location. When installed in clusters of two or three inserts, min center to center spacing of inserts in cluster is 7-3/4 in. Spacing of inserts (or cluster of inserts) shall be not less than 4 ft transverse to steel floor unit direction and not less than 5 ft along length of steel floor unit. Required Spray-Applied Fire Resistive Materials thicknesses on floor units with inserts are:

Restrained Assembly Rating Hr	Concrete Type	Min Spray Applied Fire Resistive Mtl Thkns In.
(Type S125 R)		
1	LW or NW	3/8

1-1/2	LW or NW	1/2
2	LW or NW	5/8
3	LW or NW	1-1/4
(Type S126 R)		
1	LW or NW	1/2
1-1/2	LW or NW	11/16
2	LW or NW	13/16
3	LW or NW	1-1/4
(Type S165 B)		
1	LW or NW	3/8
1-1/2	LW or NW	3/8
2	LW or NW	1/2
3	LW or NW	1-1/8
(Type S166 B)		
1	LW or NW	1/2
1-1/2	LW or NW	11/16
2	LW or NW	13/16
3	LW or NW	1-3/8

When inserts are installed in clusters of two or three, the required thickness of Spray-Applied Fire Resistive Materials on the cellular floor unit beneath the cluster shall be the greater of the thicknesses specified for the individual fittings in the cluster.

(TSACR, TSAR After set Inserts)

Installed per accompanying installation instructions in 7 in. diameter hole core-drilled through concrete topping into center of top of cell of Type WDR2 or WDR3 cellular steel floor units. Spacing shall be not more than one insert in each 8 sq ft of floor area with not less than 2 ft center to center of adjacent inserts. Required Spray-Applied Fire Resistive Materials thicknesses on floor units with inserts are:

Restrained Assembly Rating Hr	Concrete Type	Min Spray Applied Fire Resistive Mtl Thkns In.
(Types TSACR, TSAR)		
1	NW	3/8
1	LW	1/2
1-1/2	NW	3/8
1-1/2	LW	3/4
2	NW	1/2
2	LW	1-1/4
3	NW	3/4

WIREMOLD CO — Type PK-Series inserts; Type FAKM-II, RAKM, RAKM-II, FPF, S36BB, S36BC, S36CC, S37BB, S37BC, S37CC, S36PB or S36PC Service fittings or Type S3AXBP abandonment plate. Type NRG Bloc IV inserts; Type RAKM-II, FAKM-II, FPF, RAKM, RPF, S36BB, S36BC, S36CC, S37BB, S37BC, S37CC, S36PB, S36PC, S36PP, S37PB, S37PC or S37PP Service fittings or Type S3AXBP abandonment plate. Type 437-Series inserts; Type S125R, S126R, S165B or S166B service fittings. After set insert Types TSACR, TSAR.

(5) **ASC Profiles Inc.,** (ASC3I Inserts with Normal Weight or Lightweight Concrete)

Installed per accompanying installation instructions over factory pre-punched knockout holes in ASC3 cellular steel floor units. May be used for max 2 hr Restrained Assembly Rating only. The holes in the insert cover for the passage of wires shall be no more than 1/8 in. larger diam than the wire. Internally protected inserts used in pre-active or abandoned condition and activated with the ASC-FM, ASC-RM, ASC-SF, and ASC-4-Floor activation fittings are to be protected on the underside of the floor units with 1/2 in. Spray-Applied Fire Resistive Materials. Inserts without internal protection used in pre-active or abandoned condition are to be protected on the underside of the floor units with 5/8 in. Spray-Applied Fire Resistive Materials.

When insert is abandoned, the insert cover is removed, the internal intumescent pad and the protective cap reinstalled and the top of the cap filled with sand-cement grout flush with the concrete surface.

ASC PROFILES INC — Type ASC3I insert. Types ASC-FM, ASC-RM, ASC-SF and ASC-4-Floor activation fittings.

10. **Access Openings —** As required, with grommets.

11. **Metal Lath —** (Optional, not shown) — Metal lath may be used to facilitate the spray application of spray-applied resistive materials on steel bar joists and trusses. The diamond mesh 3/8 in. expanded steel lath, 1.7 to 3.4 lb per sq yd is secured to one side of each steel joist with No. 18 SWG galv steel wire at joist web and bottom chord members. Spaced 15 in. O.C. max when used. The metal lath is to be fully covered with spray-applied resistive materials with no min thickness requirements.

11A. **Non-Metallic Fabric Mesh —** (Optional, not shown) — As an alternate to metal lath, glass fiber fabric mesh, weighing approximately 2.5 oz/sq yd. Polypropylene fabric mesh, weighing approximately 1.25 oz/sq yd or equivalent, may be used to facilitate the spray application. The mesh is secured to one side of each joist web member. The method of attaching the mesh must be sufficient to hold the mesh and the spray-applied resistive materials material in place during application until it has cured. An acceptable method to attach the mesh is by embedding the mesh in minimum 1/4 in. long beads of hot melted glue. The beads of glue shall be spaced a maximum of 12 in. O.C. along the top chord of the bar joist. Another method to secure the mesh is by 1-1/4 in. long by 1/2 in. wide hairpin clips formed from No. 18 SWG or heavier steel wire.

11B. **Metal Lath —** (Not Shown) —(Required with Z-146 and Sonophone 35, otherwise optional)—Metal lath shall be 3/8 in. expanded diamond mesh, weighing 2.5 lb per sq yd. Secured to underside of steel deck with No. 12 by 3/8 in. pan head self-drilling, self-tapping screws and steel washers with an outside diam of 1/2 in. screws spaced 12 in. OC in both directions with lath edges overlapped approx 3 in.

*Bearing the UL Classification Mark

Last Updated on 2006-06-06

Questions? Notice of Disclaimer Page Top

Copyright © 2006 Underwriters Laboratories Inc.®

The appearance of a company's name or product in this database does not in itself assure that products so identified have been manufactured under UL's Follow-Up Service. Only those products bearing the UL Mark should be considered to be Listed and covered under UL's Follow-Up Service. Always look for the Mark on the product.

UL permits the reproduction of the material contained in the Online Certification Directory subject to the following conditions: 1. The Guide Information, Designs and/or Listings (files) must be presented in their entirety and in a non-misleading manner, without any manipulation of the data (or drawings). 2. The statement "Reprinted from the Online Certifications Directory with permission from Underwriters Laboratories Inc." must appear adjacent to the extracted material. In addition, the reprinted material must include a copyright notice in the following format: "Copyright © 2006 Underwriters Laboratories Inc.®"

An independent organization working for a safer world with integrity, precision and knowledge.