UL Online Certifications Directory

BXUV.P701
Fire Resistance Ratings - ANSI/UL 263

Page Bottom

Fire Resistance Ratings - ANSI/UL 263

See General Information for Fire Resistance Ratings - ANSI/UL 263

Design No. P701

June 05, 2006

Restrained Assembly Rating — 3/4, 1, 1-1/2 or 2 Hr.

(See Item 6)

Unrestrained Assembly Rating — 3/4, 1, 1-1/2 or 2 Hr.

(See Item 6)

Unrestrained Beam Rating — 1, 1-1/2 or 2 Hr.

(See Item 6)

Load Restricted for Canadian Applications — See Guide BXUV7

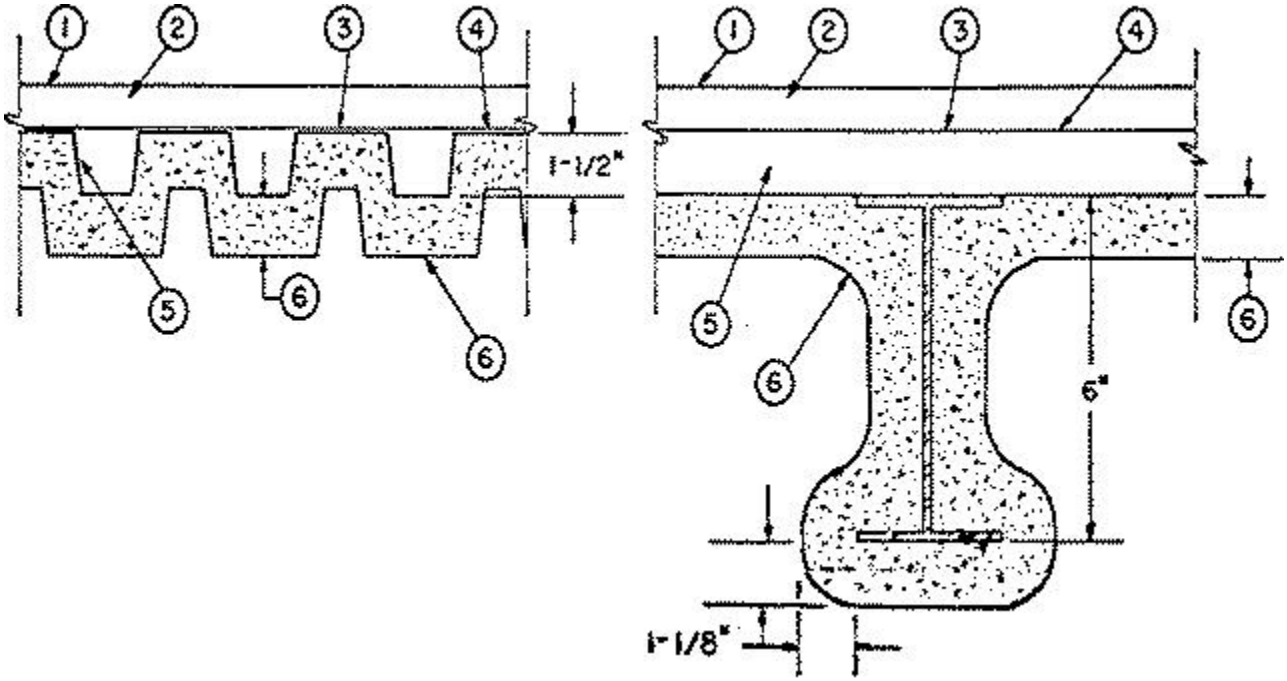

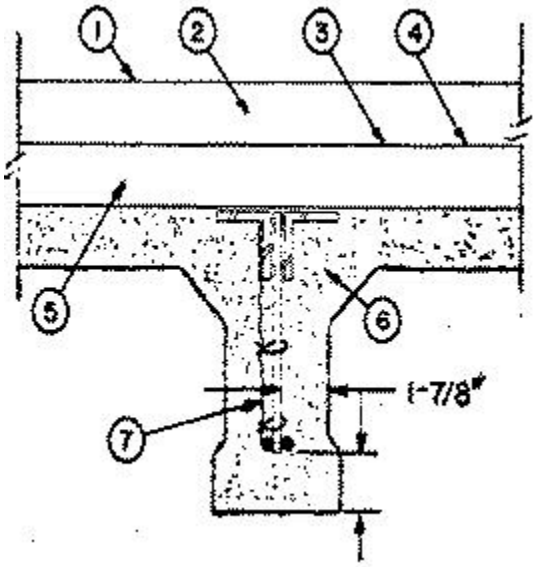

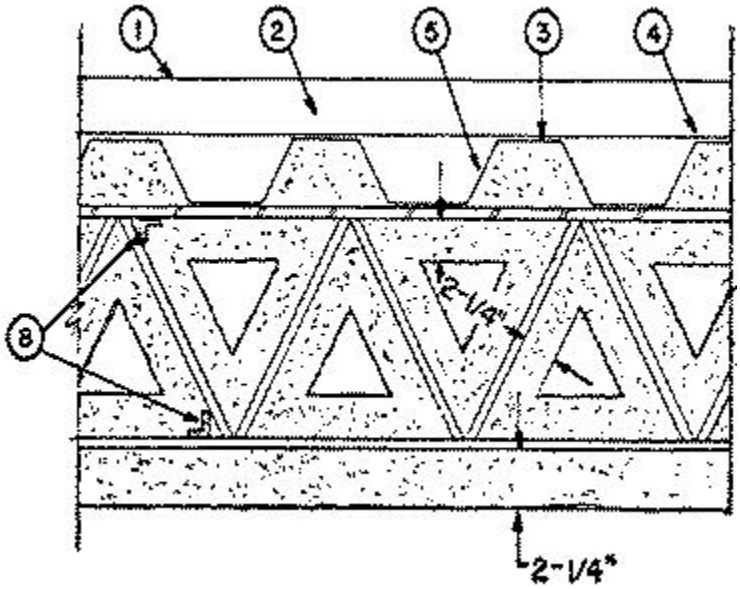

Beam — W6x16, min size or **Steel Joist** — 12J4, 14J7 or 14K4 min sizes (See Item 6). As alternate to steel beam or steel joists, Joist girders (Not shown)-20 in. min depth and 13 lb/lin ft min weight. As an alternate to steel beam or steel joists, any LH-Series joist may be used.

1. **Roof Covering* —** Consisting of hot mopped or cold application materials compatible with insulation(s) described herein which provide Class A, B or C coverings. See Roofing Materials and Systems Directory-Roof Covering Materials(TEVT).

1A. **In lieu of Item 1, roof covering consisting of single-ply Roofing Membrane* —** that is either ballasted, adhered or mechanically attached as permitted under the respective manufacturer's Classification. See Fire Resistance Directory-Roofing Membranes (CHCI).

1B. **Metal Roof Deck Panels (Not shown) —** In addition to or in lieu of Items 1 or 1A, the roof covering may consist of a mechanically fastened metal roof deck panel assembly. See Fire Resistance Directory-Metal Roof Deck Panels (CETW).

2. **Roof Insulation —**

A) **Mineral and Fiber Boards* —** To be applied in one or more layers with or without adhesive applied between vapor barrier and roof deck units, vapor barrier and board, and each layer of board. When more than one layer is required, each layer of board to be offset in both directions from layer below a min of 6 in. in order to lap all joints. Min thickness is 2 in. when Item 1A or 1B is used. Min thickness is 1 in. otherwise.

BMCA INSULATION PRODUCTS INC — Permalite.

FIBREX INSULATIONS INC — FBX Baseboard and FBX Capboard.

GAF MATERIALS CORP — GAFTEMP Perlite.

JOHNS MANVILLE INTERNATIONAL INC

B) Or, 5/8 in. **Gypsum Board** (Classified or Unclassified), supplied in 4 ft wide sheets. Installed perpendicular to steel roof deck with end joints staggered a min of 1 ft in adjacent rows and occurring over crests of steel roof deck. May be secured to crests of steel roof deck with **Adhesive*** applied at a rate of 0.4 gal per 100 sq ft.

See **Gypsum Board** (CKNX) category for names of manufacturers.

See **Adhesives** (BYWR) category for names of manufacturers.

a). And, **Foamed Plastic*,** min 1 in. thick, max 2.5 pcf, polystyrene foamed plastic insulation boards secured with asphalt glaze coat, or laid loosely on gypsum wallboard. No max overall thickness. **Note:** Adhesives and/or asphalt glaze coat may be omitted when Item 1 is used. See **Foamed Plastic*** (BRYX) category in Building Materials Directory or **Foamed Plastic*** (CCVW) category in Fire Resistance Directory for list of manufacturers.

b). Or, **Foamed Plastic*,** min. 1 in. thick, may be laid loosely over

roof covering or bonded to the single-ply membrane with adhesive or laid into the asphalt glaze coat. When applied in more than one layer, successive layers shall be installed over preceding layer without attachment. Covered with stone or masonry ballast at a min. rate of 10 psf.

OWENS CORNING SPECIALTY & FOAM

PRODUCTS

c). Or, **Building Units*** — Applied in one or more layers with or without adhesive. When more than one layer is required, the joints of each layer shall be staggered 6 in. (min). Min thickness is 2 in. when Item 1A is used. Min thickness 1-1/2 in. otherwise. Max thickness is 3-1/2 in.

PITTSBURGH CORNING CORP

THE DOW CHEMICAL CO — Type RM.

d). Or **Foamed Plastic***, polyisocyanurate foamed plastic insulation boards, nominal 48 by 48 in, applied in one or more layers over the gypsum wallboard. Min thickness is 1.3 in. with no max overall thickness. When applied in more than one layer, each layer to be offset in both directions from layer below a min of 6 in. in order to lap all joints. Adhesive (Item 3 or 3A) may be applied between layers of insulation and to vapor retarder (or gypsum wallboard if vapor retarder is not used).

ATLAS ROOFING CORP — ACFoam II, ACFoam III.

CARLISLE SYNTEC INCORPORATED — Types HP, HP-H, HP-N, HP-W.

THE DOW CHEMICAL CO — Types Hy-Therm AP, Hy-Therm Tapered.

DYPLAST PRODUCTS L L C

FIRESTONE BUILDING PRODUCTS CO, DIV

OF BFS DIVERSIFIED PRODUCTS L L C — "ISO 95+GL", "ISO 300".

GAF MATERIALS CORP — Isotherm R.

HUNTER PANELS — H Shield.

JOHNS MANVILLE INTERNATIONAL INC — ENRGY 3, ISO-1, PSI 25.

LOADMASTER SYSTEMS INC — Loadmaster Polyisocyanurate Insulation.

RMAX INC — Multi-Max-3, Multi-Max FA-3, Ultra-Max.

STEVENS ROOFING SYSTEMS, DIV OF JPS

ELASTOMERICS CORP — "Stevens ISO 2000", "Stevens ISO 3000".

e). Or **Building Units***, Polyisocyanurate foamed plastic insulation

boards faced on underside (or both sides) with mineral fiber board. Min thickness of the polyisocyanurate core is 1.3 in. No limit on max overall thickness. Boards to be installed with end joints staggered a min of 6 in. in adjacent rows. Adhesive (Item 3) may be applied between the building units and the vapor retarder (or gypsum wallboard if vapor retarder is not used).

FIRESTONE BUILDING PRODUCTS CO, DIV

OF BFS DIVERSIFIED PRODUCTS L L C — "ISO 95+ Composite"
.

JOHNS MANVILLE INTERNATIONAL INC — Fesco-Foam.

f). Or **Building Units*** — Polyisocyanurate foamed plastic insulation boards, nom. 48 by 48 or 96 in., faced on the top surface with oriented strand board. Min. thickness of the polyisocyanurate core is 1.3 in. No limit on max overall thickness. Boards to be installed with end joints staggered a min. of 6 in. in adjacent rows. Adhesive (Item 3) may be applied between the building units and the vapor retarder (or gypsum wallboard if vapor retarder is not used).

ATLAS ROOFING CORP — ACFoam NailBase Insulation, Vented-R.

THE DOW CHEMICAL CO — Hy-Therm Nail-Line Roof Insulation.

FIRESTONE BUILDING PRODUCTS CO, DIV

OF BFS DIVERSIFIED PRODUCTS L L C — Hailgard.

JOHNS MANVILLE INTERNATIONAL INC — Type Nailboard.

MARTIN FIREPROOFING GEORGIA INC — Perform-A-Deck Nailable Roof Insulation.

g). or **Building Units***— Polyisocyanurate foamed plastic insulation boards faced on the underside with wood fiber board. Min thickness of the polyisocyanurate core is 1.3 in. No limit on max overall thickness. Boards to be installed with end joints staggered a min of 6 in. in adjacent rows.

FIRESTONE BUILDING PRODUCTS CO, DIV

OF BFS DIVERSIFIED PRODUCTS L L C — "ISO 95 Wood Fiberboard Composite".

JOHNS MANVILLE INTERNATIONAL INC — "ENRGY-2 Plus.

h). or **Building Units*** — Not Shown — Composite polyisocyanurate foamed plastic insulation board with an adhered nailing surface, nom 48 by 48 or 96 in. may be used with the following limitations. These composite building units have ventilation slots internal to the panels. The building units are applied over gypsum wallboard. The thickness of the panel depends upon the thinnest portion of the polyisocyanurate insulation. The following dimensions apply to the polyisocyanurate insulation, min 1.3 in. thick. There is no limit on the max insulation thickness.

GAF MATERIALS CORP — Type INSUL-AIR.

JOHNS MANVILLE INTERNATIONAL INC — Type ISO-VENT.

i). or **Building Units*** — Polyisocyanurate foamed plastic insulation boards, nom 48 by 48 or 96 in., faced on the top surface with gypsum board. Min thickness of the polyisocyanurate core is 1.3 in. No limit on overall thickness. Boards to be installed with end joints staggered a min of 6 in. in adjacent rows.

JOHNS MANVILLE INTERNATIONAL INC — ENRGY 2 Gypsum Composite.

j. **Or Mineral and Fiber Boards* —** (Not Shown - Optional) — Applied in one or more layers over Foamed Plastic (item d.) or Building Units* (Items 2B. e, f, g, h, i). 1/2 in. minimum thickness.

JOHNS MANVILLE INTERNATIONAL INC Fesco Board, RetroFit Board, DuraBoard

k. **or Roof Insulation - Foamed Plastic* —** Not Shown - Optional, 1/4 in. thick. Placed over minimum 1-1/2 in. thick polyisocyanurate Foamed Plastic (Item 2, d) may be applied with adhesive (Item 3). Boards to be installed with end joints to be offset in both directions from layer below a min of 6 in. in order to lap all joints.

JOHNS MANVILLE INTERNATIONAL INC Invinsa Roof Board

3. **Adhesive* —** Optional — May be used with board insulation. Applied in 1/2 in. wide ribbons, approx 6 in. OC at 0.4 gal/100 sq ft

3A. **Adhesive* -(Optional) —** (Bearing the UL Classification Marking for Roof Systems (TGFU)) - The vapor retarder, the gypsum wallboard or the first layer of roof insulation may be secured with adhesive to the steel crest surfaces. Also used to attach the vapor retarder to gypsum wallboard, the first layer of insulation to vapor retarder or gypsum wallboard and each additional layer of insulation. Applied at a max rate of 19.8 g/ft^2. When FAST 100 adhesive is used, additional **Spray-Applied Fire Resistance Materials* (CHPX)** is required on the deck for the 1-1/2 and 2 hr Unrestrained Assembly Ratings. The thickness specified for the deck shall be increased by 1/16 in. for 1-1/2 hr Unrestrained Assembly Rating and 1/4 in. for 2 hr Unrestrained Assembly Rating.

CARLISLE SYNTEC INCORPORATED — FAST 100

4. **Sheathing Material* —** Optional. Vinyl film or paper scrim vapor barrier applied with adhesive or laid loosely on the steel roof deck, overlapped approx 2 in. at sides.

4A. **Sheathing Material* —** (Optional) — A self-adhered rubberized asphalt roofing underlayment membrane which may be placed on top of the gypsum wallboard (Item 2B) or on roof insulation (Item 2 or any nonpolystyrene foamed plastic insulation covered as an alternate to Item 2).

W R GRACE & CO - CONN

CONSTRUCTION PRODUCTS DIV — Grace Ice and Water Shield, Grace Select, Grace Ultra, and Grace Basik.

5. **Steel Roof Deck —** (Unclassified) — Min 1-1/2 in. deep, 18 in. wide, galv, fluted steel deck. Flutes 6 in. OC, crest width ranging from 3-1/2 to 5 in. Min gauge is 22 MSG. Ends overlapped at supports min 1-1/2 in. and welded to supports approx 9 in. OC. Adjacent units button-punched or welded together 36 in. OC along side joints; or,**Classified Steel Floor and Form Units* —** 1-1/2 or 3 in. deep, 30 or 36 in. wide, galv steel units. Min gauge is 22 MSG. Spacing of welds attaching units to supports shall not exceed 12 in. OC. Adjacent units button-punched or welded together 36 in. OC along side joints.

ASC STEEL DECK, DIV OF ASC PROFILES

INC — 24 in. wide Type N.

CONSOLIDATED SYSTEMS INC — 24 or 30 in. wide Type A; 30 or 36 in. wide Types B, BI, F; 24 in. wide Types N, NI. Units may be ptd/ptd.

LOADMASTER SYSTEMS INC — Types PS and SS-300. Type PS may be ptd/ptd.

DECK WEST INC — 36 in. wide Types B-DW, BA-DW.

MARLYN STEEL DECKS INC — Types B, F, N, NV

ROOF DECK INC — Types A, B-1, B-2 or F.

UNITED STEEL DECK INC — Types B, BI, F, NS and NI. Units may be ptd/ptd.

VERCO MFG CO — Types PLB, B, PLN or N Formlok. Units may be phos./ptd. Types PLB, HSB, PLN or N Formlock. Units may be ptd/ptd.

VULCRAFT, DIV OF NUCOR CORP — 24, 30 or 36 in. wide Types 1.5A, 1.5B, 1.5BI, 1.5F; 24 in. wide Types 3N, 3NI. For 1 and 1-1/2 h Assembly and Beam Ratings only, the Types 1.5A, 1.5B, 1.5BI, 1.5F, 3N, 3NI units may be ptd/ptd.

WHEELING-PITTSBURGH STEEL CORP, DIV

OF WHEELING CORRUGATING CO — Types A, BW, F, High Strength B, High Strength BW or N. Types BW, F, High Strength B, High Strength BW units may be ptd/ptd.

6. **Spray-Applied Fire Resistive Materials* —** Applied by mixing with water and spraying in more than one coat to a final thickness as shown on the above illustration and in the table below, to steel surfaces which must be clean and free of dirt, loose scale and oil. Min avg and min ind density of 15/14 pcf respectively. Min avg and min ind density of 19/18 pcf respectively for Type 7GP and 7HD. For method of density determination, refer to Design Information Section.

Note: When metal lath is used on joist, full thickness Spray-Applied Fire Resistive Materials is to be applied over the entire joist, including the lath. For method of density determination, refer to Design Information Section.

			Spray Applied Fire					
					12J4, 14K4 or LH Joist		Resistive Mtl Thk In. 14J7 Joist	
Restrained Assembly Rating Hr	Unrestrained Assembly Rating Hr	Unrestrained Beam Rating Hr	Deck	Beam	w/ Lath	No. Lath	w/ Lath	No. Lath
1	3/4	1	7/8	7/8	—	—	1-1/2	1-1/2
1	1	1	1-1/4	1-1/8	1-3/4	1-7/8	1-1/2	1-1/2

When metal lath is required, as indicated below, full thickness Spray-Applied Fire Resistive Materials is to be applied over the entire support including the lath.

			Spray Applied Fire Resistive Mtl Thk In					
					12J4 or 14K4 Joist		14J7 Joist	
Restrained Assembly Rating Hr	Unrestrained Assembly Rating Hr	Unrestrained Beam Rating Hr	Deck#	Beam	w/ Lath	No. Lath	w/ Lath	No. Lath
1-1/2	1-1/2	1-1/2	1-5/8	1-3/8	1-3/4	2-1/8	—	—
2	2	2	2-1/4	1-1/2	1-7/8	2-3/8	—	—

#The required minimum thickness of Spray-Applied Fire Resistive Materials on the steel deck is increased by 1/16 in. for 1-1/2 hr Unrestrained Assembly Rating and 1/4 in. for 2 hr Unrestrained Assembly Rating when Item 3A is used.

Restrained Assembly Rating Hr	Unrestrained Assembly Rating Hr	Unrestrained Beam Rating Hr	Spray Applied Fire Resistive Mtl Thk In. Joist Girder	
			w/Lath	No. Lath
1	3/4	1	1-1/2	1-1/2
1	1	1	1-1/2	1-1/2

1-1/2	1-1/2	1-1/2	1-3/4	2-1/4
2	2	2	1-7/8	2-3/8

ARABIAN VERMICULITE INDUSTRIES — Model MK-5.

GRACE CANADA INC — Types MK-4, MK-5.

W R GRACE & CO - CONN

CONSTRUCTION PRODUCTS DIV — Types MK-4, MK-5, MK-6/HY, MK-6s, RG, Monokote Acoustic 1.

GRACE KOREA INC — Types MK-6/CBF, MK-6/ED, MK-6/HY, MK-6s, Monokote Acoustic 1.

PYROK INC — Type LD.

SOUTHWEST FIREPROOFING PRODUCTS CO — Types 4, 5, 5EF, 5GP, 5MD, 7GP, 7HD, 8EF, 8GP, 8MD, 9EF, 9GP, 9MD.

6A. **Alternate Spray-Applied Fire Resistive Materials* —** Applied by mixing with water and spraying in more than one coat to a final thickness as shown on the above illustration and in the table below, to steel surfaces which must be clean and free of dirt, loose scale and oil. Min avg and min ind density of 22/19 pcf respectively. For method of density determination, refer to Design Information Section, Sprayed Materials.

			Spray Applied Fire Resistive Mtl Thk In.					
					12J4, 14K4 or LH Joist		**14J7 Joist**	
Restrained Assembly Rating Hr	**Unrestrained Assembly Rating Hr**	**Unrestrained Beam Rating Hr**	**Deck**#**	**Beam**	**w/ Lath**	**No. Lath**	**w/ Lath**	**No. Lath**
1	3/4	1	7/8	7/8	1-3/4	1-7/8	1-1/2	1-1/2
1	1	1	1-1/4	1-1/8	1-3/4	1-7/8	1-1/2	1-1/2
1-1/2	1-1/2	1-1/2+	1-5/8	1-3/8	1-3/4	2-1/8	—	—
2	2	2	1-7/8*	1-5/8	1-7/8	2-3/8	—	—
2	2	2	2-1/4	1-5/8	1-7/8	2-3/8	—	—

*Requires the use of 5/8 in. gypsum wallboard (Item 2B).

**Galvanized steel roof units only.

#The required minimum thickness of Spray-Applied Fire Resistive Materials on the steel deck is increased by 1/16 in. for 1-1/2 hr Unrestrained Assembly Rating and 1/4 in. for 2 hr Unrestrained Assembly Rating when Item 3A is used.

W R GRACE & CO - CONN

CONSTRUCTION PRODUCTS DIV — Types Monokote Acoustic 5, Z-106, Z-106/G, Z-106/HY.

GRACE KOREA INC — Types Monokote Acoustic 5, Z-106, Z-106/G, Z-106/HY.

7. **Metal Lath —** Where required — The diamond mesh, 3/8 in. expanded steel lath, 1.7 to 3.4 lb/sq yd is secured to one side of each steel joist with No. 18 SWG galv steel wire at joist web and bottom chord members, spaced 15 in. OC max. Where not required, the optional use of metal lath described, fastened as above, may be used to facilitate the spray application of spray-applied resistive material on steel bar joists and trusses. In this application, the metal lath is to be fully covered with spray-applied resistive material with no minimum thickness required.

7A. **Nonmetallic fabric mesh —** (Optional, not shown) — As an alternate to the optional use of metal lath, glass fiber fabric mesh, weighing approximately 2.5 oz/sq yd, polypropylene fabric mesh, weighing approximately 1.25

oz/sq yd or equivalent, may be used to facilitate the spray application. The mesh is secured to one side of each joist web member. The method of attaching the mesh must be sufficient to hold the mesh and the spray-applied spray-applied resistive material in place during application until it has cured. An acceptable method to attach the mesh is by embedding the mesh in minimum 1/4 in. long beads of hot melted glue. The beads of glue shall be spaced a maximum of 12 in. OC along the top chord of the bar joist. Another method to secure the mesh is by 1-1/4 in. long by 1/2 in. wide hairpin clips formed from No. 18 SWG or heavier steel wire.

8. **Bridging —** In accordance with Specifications adopted by the Steel Joist Institute and revised to November 15, 1989. Continuous steel angles, min. size 1-1/4 by 1-1/4 by 1/8 in. welded to top and bottom chords. Bridging coated with 2-1/4 in. thickness of Spray-Applied Fire Resistive Materials for the 1 or 1-1/2 h Assembly and Beam Ratings and 2-7/16 in. for the 2 h Assembly and Beam Ratings.

*Bearing the UL Classification Mark

Last Updated on 2006-06-05

Questions? Notice of Disclaimer Page Top

Copyright © 2006 Underwriters Laboratories Inc.®

The appearance of a company's name or product in this database does not in itself assure that products so identified have been manufactured under UL's Follow-Up Service. Only those products bearing the UL Mark should be considered to be Listed and covered under UL's Follow-Up Service. Always look for the Mark on the product.

UL permits the reproduction of the material contained in the Online Certification Directory subject to the following conditions: 1. The Guide Information, Designs and/or Listings (files) must be presented in their entirety and in a non-misleading manner, without any manipulation of the data (or drawings). 2. The statement "Reprinted from the Online Certifications Directory with permission from Underwriters Laboratories Inc." must appear adjacent to the extracted material. In addition, the reprinted material must include a copyright notice in the following format: "Copyright © 2006 Underwriters Laboratories Inc.®"

An independent organization working for a safer world with integrity, precision and knowledge.