UL Online Certifications Directory

BXUV.P921
Fire Resistance Ratings - ANSI/UL 263

Page Bottom

Fire Resistance Ratings - ANSI/UL 263

See General Information for Fire Resistance Ratings - ANSI/UL 263

Design No. P921

June 05, 2006

Restrained Assembly Rating — 1, 1-1/2 or 2 Hr (See Items 4, 6, 7 and 9)

Unrestrained Assembly Rating — 0 Hr (See Item 7)

Unrestrained Beam Rating — 1, 1-1/2 or 2 Hr (See Items 4, 6, 7 and 9)

Load Restricted for Canadian Applications — See Guide BXUV7

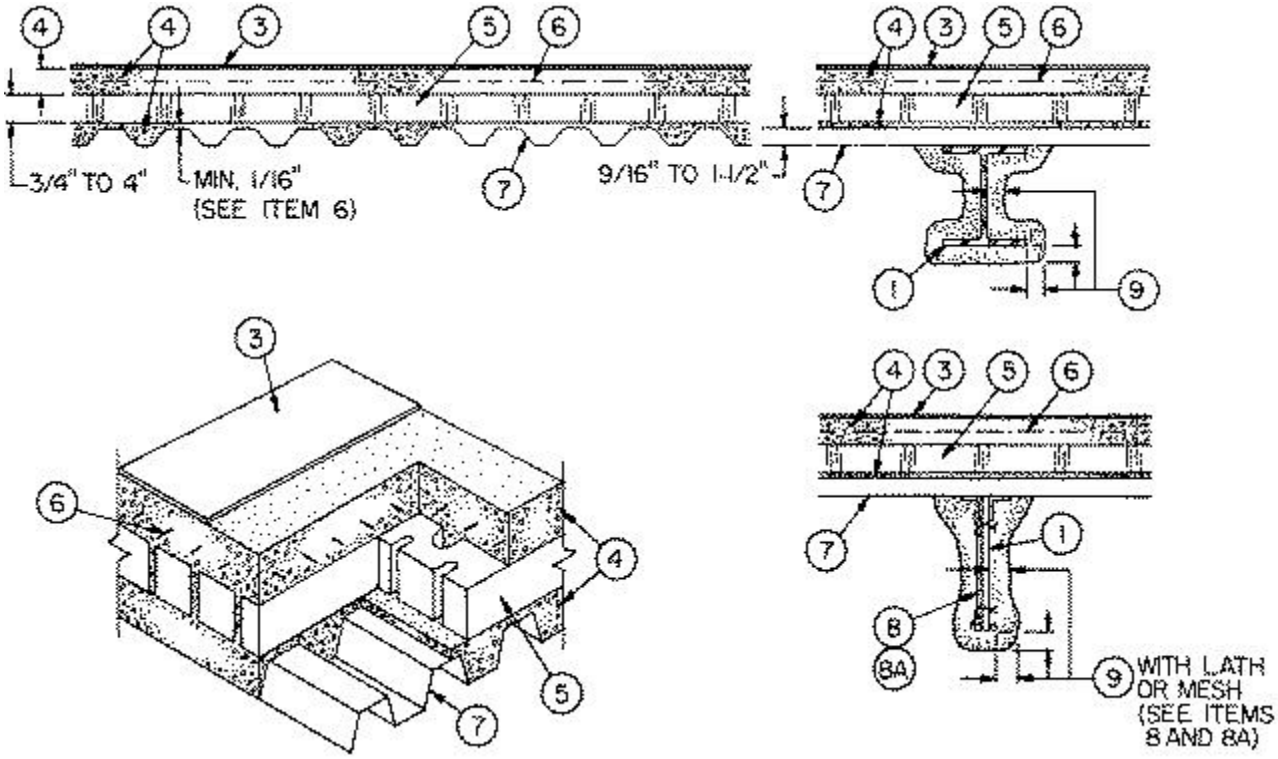

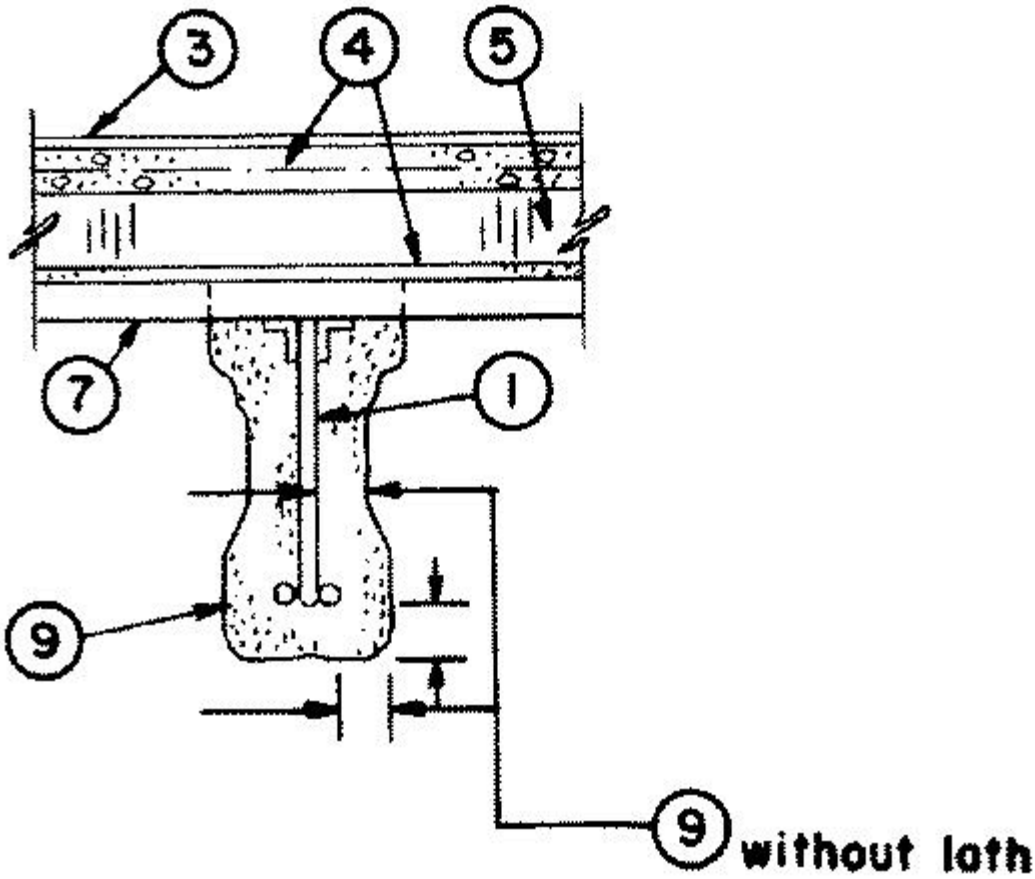

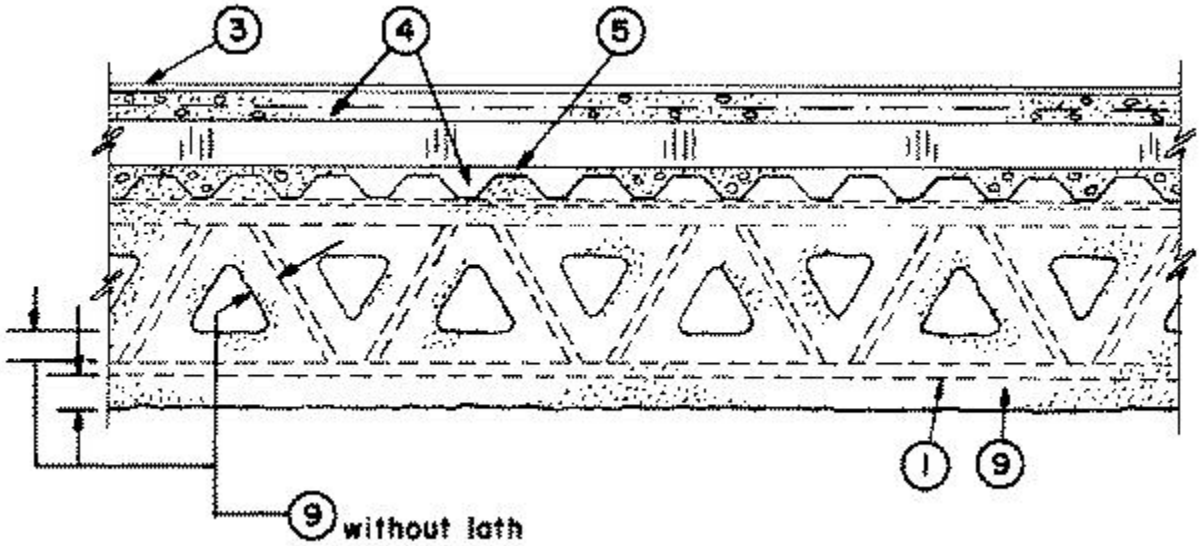

1. **Supports —** W6X16 or W8X10 beam. As alternate to steel beams, Joist girders — (Not shown) — 20 in. min depth and 13 lb/lin ft min weight.

1A. **Steel Joists —** 12K5 or heavier steel joist may be used as secondary support.

2. **Bridging Angles —** (Not shown) — 1-1/4 by 1-1/4 by 1/8 in. thick angles for use with steel joists. Angles welded to top and bottom chords of the joists.

3. **Roof Covering* —** Consisting of hot mopped or cold application materials compatible with insulation(s) described herein which provide Class A, B or C coverings. See Roofing Materials and Systems Directory-Roof Covering Materials (TEVT).

3A. **In lieu of Item 3, roof covering consisting of single-ply Roofing Membrane* —** that is either ballasted,

adhered or mechanically attached as permitted under the respective manufacturer's Classification. See Fire Resistance Directory — Roofing Membranes (CHCI).

4. **Vermiculite Concrete —** 6 cu ft of **Vermiculite Aggregate*** to 94 lb of Portland cement and 0.11 lb of air entraining agent mixed with approx 25 gal of water. Min compressive strength shall be 125 psi when tested in accordance with ASTM C495. Min thickness above foamed plastic is 2 in. Min thickness between top of steel deck and bottom of foamed plastic shall be 1/16 in. when wire mesh (Item 6) is used and 1/8 in. when the wire mesh is not used. When foamed plastic (Item No. 5 or 5A) is not used the topping thickness of Vermiculite Concrete over the crests of steel deck shall be a min of 2-3/16 in. for the 1 and 1-1/2 h ratings and 2-3/8 in. for the 2 h rating. The max vermiculite concrete thickness shall be determined by job site conditions.

ELASTIZELL CORP OF AMERICA — Types MS16-U, MSV 200.

MANDOVAL LTD

MANDOVAL VERMICULITE PRODUCTS INC

PALMETTO VERMICULITE CO

SIPLAST INC

STRONG CO INC

VERMICULITE PRODUCTS INC

4A. **As an alternate to Item 4, Cellular Concrete— Roof Topping Mixture* —** Foam concentrate mixed with water and Portland cement per manufacturer's specifications. Cast dry density and 28-day compressive strength of min 190 psi as determined in accordance with ASTM C495-66. Min thickness above foamed plastic is 2 in. Min thickness between the top of steel deck and the bottom of foamed plastic shall be 1/8 in. When foamed plastic is not used, the min thickness of Roof Topping Mixture* above the top of the steel deck shall be 2-3/4 in.

CELCORE INC — Type Celcore with cast dry density of 31 (+ or - 3.0) pcf or Type Celcore MF with cast dry density of 29 (+ or - 3.0) pcf.

CELLUFOAM CONCRETE SYSTEMS, DIV OF

CELLUFOAM CONCRETE OF — Cast dry density of 30 (+ or - 3.0) pcf.

ELASTIZELL CORP OF AMERICA — Type II. Mix #1 of cast dry density 39 (+ or -) 3.0 pcf, Mix #2 of cast dry density 40 (+ or -) 3.0 pcf, Mix #3 of cast dry density 47 (+ or -) 3.0 pcf.

LITE-CRETE INC — Cast dry density of 29 (+ or -) 3.0 pcf.

CELLULAR CONCRETE L L C — Cast dry density 37 (+ or -) 3.0 pcf.

SIPLAST INC — Mix #2. Cast dry density of 36 (+ or -) 3.0 pcf.

4B. **As an alternate to Item 4 —** Perlite Concrete — Mix consists of 6 cu ft of **Perlite Aggregate*** to 94 lb of Portland cement and 1-1/2 pints of air-entraining agent. Thickness of perlite concrete topping to be 2 in. min from the top plane of the foamed plastic. Min thickness between the top of steel deck and the bottom of the foamed plastic shall be 1/8 in.

See Perlite Aggregate (CFFX) category in Fire Resistance Directory for names of Classified companies.

4C. **As an alternate to Item 4 —** Cellular Concrete — Roof Topping Mixture* — Foam Concentrate mixed with water, Portland Cement and UL Classified Vermiculite Aggregate per manufacturer's application instructions. Cast dry density of 33 (+ or -) 3.0 pcf and 28-day compressive strength of min 250 psi as determined in accordance with ASTM C495-86. A 1/8 in. min slurry coat shall be employed below the foamed plastic (Item 5). The cellular concrete topping thickness, above the foamed plastic, shall be 2 in. min. When foamed plastic is not used, the min thickness of Roof-Topping Mixture, above the top of the steel deck, shall be 2-3/4 in.

CELLULAR CONCRETE L L C — Mix #3.

SIPLAST INC — Mix #3.

5. **Foamed Plastic* —** (Optional) — Foamed plastic insulation boards with holes and/or slots. Nom size 24 by 48

in. Thickness shall be 3/4 in. to 8 in.

SIPLAST INC

VERMICULITE PRODUCTS INC

5A. **Foamed Plastic* —** Nom 24 by 48 in., 48 by 48 in. or 30 by 60 in. by max 8 in. thick polystyrene foamed plastic insulation boards with holes symetrically placed having a max density of 2.0 pcf. For use only with cellular concrete roof topping mixture.

STARRFOAM MFG INC

5B. **Foamed Plastic* —** (Optional) — Nom 24 x 48 by max 8 in. thick polystyrene foamed plastic insulation boards having a density of 2.5 pcf max. Each insulation board shall contain six nom 3 in. diam holes oriented in two rows of three holes each, with the holes spaced 12 in. OC transversely and 16 in. OC longitudinally.

See Foamed Plastic* (BRYX) category in the Building Materials Directory or **Foamed Plastic* (CCVW)** category in Fire Resistance Directory for list of Classified Companies.

6. **Wire Mesh —** No. 19 SWG galv steel wire twisted to form 2 in. hexagons. In addition, straight No. 16 SWG galv steel wire woven into mesh and spaced 3 in. apart for stiffness. Mesh installed without attachment perpendicular to supports and overlapped 6 in. at the sides. As an alternate, 4 by 8 in., No. 12/14 SWG or 2 by 2 in., No. 14/14 SWG welded wire fabric may be used. The wire mesh may be omitted for the **1 and 1-1/2 h ratings.** Thickness of vermiculite concrete between the top of the roof deck and the bottom of the foamed plastic insulation shall be 1/8 in. min when wire mesh is not used.

6A. **Fiber Reinforcement* —** (Optional, not for use to achieve 2 hr ratings) - For use only with Roof-Topping Mixtures* manufactured by Cellular Concrete LLC. In lieu of Wire Mesh (Item 6), Fiber Reinforcement may be added to roof topping mixtures (Items 4A or 4C). See Fiber Reinforcement (CBXQ) Category for rate that fibers are added to roof topping mixture.

FORTA CORP — Types Econo-Mono, Mighty-Mono, Stucco-Bond, Econo-Net, Cast-Master , Super-Net, Ultra-Net.

7. **Steel Roof Deck —** (Unclassified) — Noncomposite design, vented or nonvented units, 9/16 in., 15/16 in., 1-5/16 in., 1-1/2 or 2 in. deep galv units, nom 24 to 36 in. wide. When vented or nonvented 9/16 in. deep galv units are used, the **Restrained Assembly and Beam Ratings shall not exceed 1-1/2 h.** Welded to supports with 3/8 in. puddle welds through weld washers spaced 15 in. OC. Adjacent units overlapped one corrugation. Max support spacings 8 ft OC unless otherwise noted for specific Classified units and their recommended loadings. Steel thickness to be No. 24 MSG min when supports are spaced not more than 8 ft OC, No. 26 MSG min when supports are spaced not more than 6 ft OC, and No. 28 MSG, 9/16 in. deep steel deck may be used when supports are spaced 4 ft. OC. Roof deck units to be loaded not more than 75 percent of their max allowable bending stress. For clear spans not more than 7 ft., 8-3/8 in. the **Unrestrained Assembly Rating is equal to the Restrained Assembly Rating.** Or, **Classified Steel Floor and Form Units*** conforming to the same installation, steel thickness, loading requirements and **Restrained Assembly Rating** as described for unclassified units.

ASC STEEL DECK, DIV OF ASC PROFILES

INC — Types CP32, (1-3/8), B, DGB, Ventform and 2W. Two or three — 10 ft — 0 in. continuous spans may be used for Type B, DGB or 2W units, and 12 ft — 0 in. simple or continuous spans may be used for Type N units, provided that the total loading on these spans is based on the allowable steel stress and the deflection limitation criteria using the steel (noncomposite) section properties of these units.

CONSOLIDATED SYSTEMS INC — Consoliform and Comvent Types EHD, HD, S, SD. -Media-Dek Type 1 (vented and nonvented) and Media-Dek Type 2, Type R.

DECK WEST INC — 36 in. wide Type B-DW, BA-DW or 3-DW. The Type 3-DW units made from 22 ga or heavier steel may be used for a maximum 10 ft., 0 in. spans, provided that the total loading on these spans is based on the allowable steel stresses and the deflection limitation criteria using the steel (noncomposite) section properties of these units.

EPIC METALS CORP — Type Metricform, ER2R, ER3.5, Epicore A, 3.5 Epicore A.

MARLYN STEEL DECKS INC — Types B, BV, EF, EVF, F, HF, HVF, N, NV, SF, SVF.

NEW MILLENNIUM BUILDING SYSTEMS L L C — Types B, N, 0.6FD, 1.0FD, 1.5FD.

H H ROBERTSON — Type QL-3 or Sec. 3 with or without up-punched integral hanger tabs, and 3 in. QL-99. The 3 in. deep Type QL-99 units made from 22 ga or heavier steel may be used for max 10 ft, 0 in. spans, provided the total loading on these spans is based on the allowable steel stresses and the deflection limitation criteria using the

steel (noncomposite) section properties of these units.

ROOF DECK INC — Vented or Nonvented Types EHD Multi-Rib, HD Multi-Rib, S Multi-Rib.

MORIN CORP — 24, 30 or 36 in. wide, Types LXR-B; 30 in. wide, Types LXR-B-N-30 and LXR-B-N-30-I; 35 in. wide, Types LXR-B-35 and LXR-B-35-I.

UNITED STEEL DECK INC — Types B, UFX, UFXV, UFX-36, UFXV-36.

VALLEY JOIST — Types F, B, BI, VS, B vented.

VERCO MFG CO — Types PLB, B, 2"B, 2" B Ventlok, Vercor, Vercor-Ventlok, PLW2, W2, System 80, PLN and N. Two or three 10 ft 0 in. continuous spans may be used for the following units under the following conditions: (A) For Types PLB, B, PLW2 and W-2 units the total loading on these spans shall be based on the allowable steel stress or the deflection limitation criteria using the steel (noncomposite) section properties of these units. (B) For System 80 the min gauge of units is 18 MSG and use is limited to three continuous spans. (C) For 2"B and 2" B Ventlok the total loading on these spans shall be limited to 80 percent of the allowable steel bending stress, or the deflection limitation criteria.

Types PLN and N deck may be used on simple or continuous 12 ft 0 in. spans with the total loading on these spans limited by the allowable bending stress and/or the deflection limitation criteria.

VULCRAFT, DIV OF NUCOR CORP — Types 0.6C, 0.6CPR, 0.6CPRV, 0.6CSV, 1.0C, 1.0CSV, 1.3C, 1.3CSV, 1.5C, 2C, 3C, 1.5B, 1.5BI, 1.5F, 3N, 3NI. Type 1.5B units made from 21MSG or heavier steel may be used on simple or continuous 10 ft 0 in. spans with the total load on these spans limited by the allowable bending stress and/or the deflection criteria of this deck. Type 3N made from 22MSG or heavier steel may be used on simple or continuous 12 ft 0 in. spans with the total load on these spans limited by the allowable bending stress and/or the deflection criteria of this deck.

WHEELING-PITTSBURGH STEEL CORP, DIV

OF WHEELING CORRUGATING CO — Types BW, F, High Strength B, High Strength BW, TF-50, TF-75, TF-125, TF-H3, TV-50, TV-75, TV-125, TV-H3, Permaform Type H. Nonvented Types BW, Strongfoam SF-3; vented Type SV-3.

8. **Metal Lath —** (Optional) — Metal lath is used to facilitate the spray application of Spray-Applied Fire Resistive Materials on steel bar joists and trusses. The diamond mesh, 3/8 in. expanded steel lath, 1.7 to 3.4 lb per sq yd, is secured to one side of each steel joist with No. 18 SWG galv steel wire at joist web and bottom chord members, spaced 15 in. OC max. When used, the metal lath is to be fully covered with Spray-Applied Fire Resistive Materials with no min thickness requirements.

8A. **Non-Metallic Fabric Mesh —** (Optional) — As an alternate to metal lath, glass fiber fabric mesh, weighing approximately 2.5 oz per sq yd, polypropylene fabric mesh, weighing approximately 1.25 oz per sq yd or equivalent, is used to facilitate the spray application. The mesh is secured to one side of each joist web member. The method of attaching the mesh must be sufficient to hold the mesh and the spray-applied Spray-Applied Fire Resistive Materials material in place during application until it has cured. An acceptable method to attach the mesh is by embedding the mesh in minimum 1/4 in. long beads of hot melted glue. The beads of glue shall be spaced a maximum of 12 in. OC along the top chord of the bar joist. Another method to secure the mesh is by 1-1/4 in. long by 1/2 in. wide hairpin clips formed from No. 18 SWG or heavier steel wire.

9. **Spray-Applied Fire Resistive Materials* —** Applied by mixing with water and spraying in more than one coat to the final thickness shown below to joist or beam surfaces which are clean, free of dirt, loose scale and oil. A 1-3/4 in. thickness of Spray-Applied Fire Resistive Materials shall be applied to the bridging bars. Min avg and min ind density of 15/14 pcf respectively. Min avg and min ind density of 19/18 pcf respectively for Type 7GP and 7HD. For method of density determination refer to Design Information Section.

		Thkns In.			
Restrained Assembly Rating Hr	**Unrestrained Beam Rating Hr**	**Min Thkns on Beam**		**Min Thkns on Joist (No. Lath)**	**Min Thkns on Joist (with Lath)**
		W6x16	**W8x10**		
1	1	1	1-3/8	1-1/2+	1-1/2+
1-1/2	1-1/2	1-1/4	1-3/4	2-1/4	1-3/4

2	1-1/2	1-3/8	1-7/8	2-1/4	1-3/4
2	2	1-5/8	2-1/4	2-7/16	1-7/8

ARABIAN VERMICULITE INDUSTRIES — Types MK-5, MK-6/CBF, MK-6/ED, MK-/HY, MK-6s, Sonophone 1.

GRACE CANADA INC — Type MK-5

W R GRACE & CO - CONN

CONSTRUCTION PRODUCTS DIV — Types MK-4, MK-5, MK-6/HY, MK-6S, RG, Monokote Acoustic 1.

GRACE KOREA INC — Types MK-6/CBF, MK-6/ED, MK-6/HY, MK-6S, Monokote Acoustic 1.

PYROK INC — Type LD

SOUTHWEST FIREPROOFING PRODUCTS CO — Types 4, 5, 5EF, 5GP, 5MD, 7GP, 7HD, 8EF, 8GP, 8MD, 9EF, 9GP, 9MD

+For 1 Hr ratings, the min joist size shall be 14J7.

9A. **Spray-Applied Fire Resistive Materials* —** (Not Shown) — In lieu of Item 9 the following Spray-Applied Fire Resistive Materials may be applied by mixing with water and spraying in multiple coats to final thicknesses shown below. Min avg and min ind density 19/18 pcf respectively for Types 7GP, 105. Min avg and min ind density of 22/19 pcf respectively for Types Z-106, Z-106/G, Z-106/HY. For method of density determination, refer to Design Information Section, Sprayed Material.

Restrained Assembly Rating Hr	Unrestrained Beam Rating Hr	Min Thkns on Beam in	
		W6x16	W8x10
1	1	1-1/16	1-1/2
1-1/2	1-1/2	1-3/8	1-15/16
2	1-1/2	1-1/2	2-1/16
2	2	1-13/16	2-9/16

ARABIAN VERMICULITE INDUSTRIES — Types Sonophone 5 , Z-106, Z-106/G, Z-106/HY.

W R GRACE & CO - CONN

CONSTRUCTION PRODUCTS DIV — Types 105, Monokote Acoustic 5, KM-601, Z-106, Z-106/G, Z-106/HY.

GRACE KOREA INC — Types Monokote Acoustic 5, Z-106, Z-106/G, Z-106/HY.

SOUTHWEST FIREPROOFING PRODUCTS CO — Type 7GP.

9B. **Spray-Applied Fire Resistive Materials* —** (Not Shown) — In lieu of Item 9 or 9A the following Spray-Applied Fire Resistive Materials may be applied by mixing with water and spraying in multiple coats to final thicknesses shown below. Min avg and min ind density 40/36 pcf respectively. For method of density determination, refer to Design Information Section, Sprayed Material.

Restrained Assembly Rating Hr	Unrestrained Beam Rating Hr	Min Thkns on Beam in	
		W6x16	W8x10
1	1	1-1/16	1-1/2
1-1/2	1-1/2	1-3/8	1-15/16

2	1-1/2	1-1/2	2-1/16
2	2	1-13/16	2-9/16

ARABIAN VERMICULITE INDUSTRIES — Type Z-146

W R GRACE & CO - CONN

CONSTRUCTION PRODUCTS DIV — Type Z-146

GRACE KOREA INC — Type Z-146

*Bearing the UL Classification Mark

Last Updated on 2006-06-05

Questions? Notice of Disclaimer Page Top

Copyright © 2006 Underwriters Laboratories Inc.®

The appearance of a company's name or product in this database does not in itself assure that products so identified have been manufactured under UL's Follow-Up Service. Only those products bearing the UL Mark should be considered to be Listed and covered under UL's Follow-Up Service. Always look for the Mark on the product.

UL permits the reproduction of the material contained in the Online Certification Directory subject to the following conditions: 1. The Guide Information, Designs and/or Listings (files) must be presented in their entirety and in a non-misleading manner, without any manipulation of the data (or drawings). 2. The statement "Reprinted from the Online Certifications Directory with permission from Underwriters Laboratories Inc." must appear adjacent to the extracted material. In addition, the reprinted material must include a copyright notice in the following format: "Copyright © 2006 Underwriters Laboratories Inc.®"

An independent organization working for a safer world with integrity, precision and knowledge.