UL Design No. D788

February 27, 2007

Restrained Assembly Ratings — 1, 1-1/2, 2, 3 or 4 Hr (See Items 1, 5)
Unrestrained Assembly Ratings — 1, 1-1/2, 2, 3 or 4 Hr(See Items 2, 5)
Unrestrained Beam Ratings — 1, 1-1/2, 2. 3, or 4 Hr (See Item 5)

Load Restricted for Canadian Applications — See Guide BXUV7

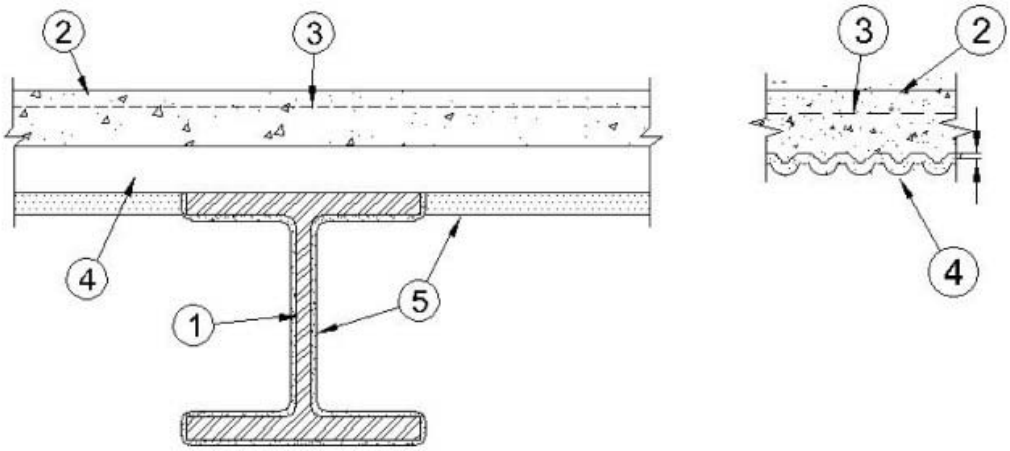

1. **Support —** W8x28 min size steel beam or min. 10K1 steel joists.

2. **Normal Weight or Lightweight Concrete —** Normal weight concrete carbonate or siliceous aggregate, 3500 psi compressive strength, vibrated. Lightweight concrete, expanded shale, or slate aggregate by rotary-kiln method, or expanded clay aggregate by rotary-kiln or sintered-grate method, 3000 psi compressive strength, vibrated, 4 to 7 percent entrained air. Minimum 2-1/2 in. concrete thickness.

3. **Welded Wire Fabric —** 6x6 — 8/8 SWG.

4. **Steel Form Units* —** No. 28 MSG galv corrugated sheet steel min, 2-1/2 in. pitch and 1/2 in. depth of corrugations. Units welded to each joist, 36 welds per 100 sq ft of form units, with at least one weld at each joint.

4A. **Steel Form Units* —** (Not shown) — As an alternate to Item 3, 1-1/2 , 2, or 3 in. deep min. 22 gauge, fluted units, welded to the beam.

(1) all 18, 24, 26, 28 or 36 in. wide cellular.

(2) all fluted.

(3) one or two 3 in. deep, 12 in. wide, 18/18 MSG min cellular units, alternating with 3 in. deep fluted or other cellular.

(4) any blend of fluted and 18, 24, 26, 28, or 36 in. wide cellular.

(5) 3 in. deep, 30 in. wide cellular with 8-1/8 in. wide valley along side joints may be used when 3/8 in. diam reinforcing bars are placed 1-1/2 in. to each side of side joints and 1 in. above bottom of unit.

(6) Corrugated, 1-5/16 in. deep, 30 in. wide, 24 MSG min galv units with shear wires factory welded to deck corrugations. Welded to supports 12 in. OC. through welding washers. For shear wire spacing of 8 in. or less the steel deck stress shall not exceed 20 KSI. For shear wire spacing greater than 8 in. OC. but less than or equal to 12 in. OC., steel deck stress shall not exceed 12 KSI.

ASC STEEL DECK, DIV OF ASC PROFILES INC — 24 in. wide Types B, BF-24, BR, BMOD, BRMOD, N, NF, 2W24, 3W24, 2WF24, 3WF24; 30 in. wide Types, B, BF-30, BR; 36 in. wide Types B-36, 2W36, 3W36, 2WF36, 3WF36; 24 or 30 in. wide Types ASC2 or ASC3.

CANAM STEEL CORP — 36 in. wide Type P-3623, P-3606, and P-2432 composite.

CHIA TEH CONSTRUCTION MATERIAL CO LTD — 24 or 36 in. wide Mac-Lok 3; 24 in. wide CFD-3.

CONSOLIDATED SYSTEMS INC — 24 in. wide Types CFD-2, CFD-3; 24, 30 or 36 in. wide Type CFD-1.5; 24 or 36 in. wide Types Mac-Lok 2, Mac-Lok 3; 24 in. wide, Types B2C, B2FC, NC, NFC; 30 in. wide Type B3C; 12 in. wide Mac-Way cellular 45 MOW, 2-633 MTWA, 3-633 MTWA, 2-633MTWV, 3-633MTWV+, 24 in. wide Type Versa-Dek.

DECK WEST INC — 36 in. wide Type B-DW, Inverted B-DW, BA-DW, Inverted BA-DW, 2-DW or 3-DW. Side joints of Type 2-DW and 3-DW may be fastened together with min 1 in. long No. 12 x 14 self-drilling, self-tapping steel screws 36 in. OC.

EPIC METALS CORP — 24 in. wide Types EC150, ECP150, EC300, ECP300, EC366, ECP366, EC150, EC300 inverted, Epicore A; 2.0 ECA, 30 in. wide Types ECB150, ECBR150; 36 in. wide Type EC266.

GENS METALS INC — 24 or 36 in. wide Types LF2, LF3.

HAMBRO STRUCTURAL SYSTEMS, DIV OF CANAM STEEL CORP — 36 in. wide, 1-1/2 in. Type P3615HB. The max superimposed loadings for Type P3615HB units shall not exceed 250 PSF. For single spans, the use of the units shall be limited to 5 ft 6 in., 6 ft 0 in. and 6 ft 6 in. max spans for the 22, 20 and 18 gauge units, respectively. For multiple spans, 18 gauge units may be used on a max 7 ft 6 in. spans with a max total superimposed loading of 240 PSF.

H H ROBERTSON — QL Types, 24 in. wide 3 or 3 inverted, UKX, UKX-3, 2 in. 99, AKX, 21 or 21 inverted, 121, NKX, TKX; 24 or 30 in. wide GKX, GKXH, GKX-A; 36 in. wide 99, AKX, WKX; 24, 26, or 36 in. wide NKX; 1.5NKC, NKC, AKX, 2 or 3 in. TKC; 12 in. wide noncomposite Sec. 12; 17 in. wide 21; 26 or 28 in. wide UKX, 87.5 cm wide. Side joints of QL, 99, 121, WKX, TKX, TKC, and Metric units - QL-77-900; QLC-78-900 may be welded together 60 in. OC. Side joints of 99, AKX, WKX, GKX, GKX-A, TKX and Metric units - QL-77-900 and QLC-78-900 may be fastened together with min 1 in. long No. 12x14 self-drilling, self-tapping steel screws 36 in. OC.

MARLYN STEEL DECKS INC — Type 1.5 CF, 2.0 CF or 3.0 CF.

MORIN CORP — 24, 30 or 36 in. wide Types LXR-B, LXR-B inverted; 24 or 36 in. wide Type LXR-3W; 36 in. wide Type LR-2W.

NEW MILLENNIUM BUILDING SYSTEMS L L C — Type 1.5CD, 2.0CD, or 3.0CD.

ROOF DECK INC — 36 in. wide Types LOK 1 1/2, LOK 1 1/2 R; 24 in. wide Types LOK-2, LOK-3.

UNITED STEEL DECK INC — 24 in. wide, Types 1-1/2 , 2 or 3 in. LOK-Floor and LOK-Floor Cell; 36 in. wide, Types 2 or 3 in. LOK-Floor and LOK-Floor Cell; 24 in. wide, Types N-LOK and N-LOK Cell; 24, 30 or 36 in. wide, Type 1-1/2 in. B-LOK and B-LOK Cell.

VALLEY JOIST — 24 or 36 in. wide Types WVC 1-1/2 or WVC 2.

VULCRAFT, DIV OF NUCOR CORP — 24 in. wide, Types 1-1/2 , 2 or 3 in. LOK-Floor and LOK-Floor Cell; 36 in. wide, Types 2 or 3 in. LOK-Floor and LOK-Floor Cell; 24 in. wide, Types N-LOK and N-LOK Cell; 24, 30 or 36 in. wide, Type 1-1/2 in. B-LOK and B-LOK Cell.

VERCO DECKING INC - A NUCOR CO — 24, 30 or 36 in. wide Types PLB, B, BR; 24 or 36 in. wide Types PLW2, W2, PLW3, W3; 24 in. wide Types PLN, N. 12 in. wide PLW2, W2, PLW3 or W3 units may be blended with 24 or in. wide PLW2, W2, PLW3 or W3 units, respectively. Units may be phos/ptd.

VULCRAFT, DIV OF NUCOR CORP — 24, 30 or 36 in. wide, Types 1.5VL, 1.5VLI, 1.5VLP, 1.5VLR; 24 or 36 in. wide, Types 2VLI, 3VLI, 2VLP, 3VLP. Side joints of Type 1.5VL may be fastened together with min 1 in. long No. 12x14 self-drilling, self-tapping steel screws 36 in. OC max.

THE WIREMOLD COMPANY — 24 in. wide, Types 2 or 3 in. WDR.

WHEELING-PITTSBURGH STEEL CORP, DIV OF WHEELING CORRUGATING CO — 30 in. wide Types SB-150, -150N, -150NR, -150R; 30 or 36 in. wide Types SB-B16LF, -B16LFR; 24 or 36 in. wide Types SB-P21LF, -P31LF; 24 in. wide Types SB-200, -300. Type SB-B16LFR may be phos/ptd. Lock Form Type, 24, 30 or 36 in. Types B16LF, B16LFNV; 24 in. wide Types C34LF, N34LF, P34LF, P34LFNV; 12, 24 or 36 in. wide Types C20LF, C30LF, C31LF, P20LF, P30LF, P31LF; 36 in. wide Types 1.5 SB, 1.5 SBR; 24 or 36 in wide Types 2.0 SB, 3.0 SB, 36 in. wide Type High Strength 1.5 SBI, 36 in. wide Type High Strength 1.5 SBN; 30 in wide, Types 1-1/2 in. V-Grip, 1-1/2 in. RV-Grip; 24 or 36 in. wide Types 212V-Grip, 312 V-Grip; 36 in. wide Types 212VW3-Wireway, 312VW3-Wireway.

5. **Spray-Applied Fire Resistive Materials* —** Applied by mixing with water and spraying in more than one coat to a final thickness as shown below to steel surfaces which must be free of dirt, loose scale and oil. Min avg and min ind density of 15/14 pcf respectively. Min avg and min ind density of 19/18 pcf respectively for Type 7GP and 7HD. For method of density determination, see Design Information Section, sprayed materials.

Min. Required SFRM Thickness					
Restrained Assembly	**Unrestrained Assembly**	**Unrestrained Beam**	**Deck++**	**Joist Thickness**	**Joist Thickness Joist spacing 4 ft. OC spacing or less**
1	1	1	3/8	3/4	9/16
1-1/2	1	1	3/8	13/16	13/16
1-1/2	1-1/2	1-1/2	3/8	1-3/16	15/16
2	1	1	3/8	1-5/16	1-1/4
2	2	2	3/8	1-5/8	1-1/4
3	3	3	11/16	2-9/16	2

Min. Required SFRM Thickness					
Restrained Assembly	**Unrestrained Assembly**	**Unrestrained Beam**	**Concrete**	**Deck++**	**Beam Thickness**
1	1	1	LW	3/8	3/8
1	1	1	NW	3/8	7/16
1-1/2	1	1	LW	3/8	3/8
1-1/2	1	1	NW	3/8	7/16
1-1/2	1-1/2	1-1/2	LW	3/8	9/16
1-1/2	1-1/2	1-1/2	NW	3/8	5/8
2	1	1	LW	3/8	3/8
2	1	1	NW	3/8	7/16
2	2	2	LW	3/8	13/16
2	2	2	NW	3/8	13/16
3	1-1/2	1-1/2	LW	11/16	9/16
3	1-1/2	1-1/2	NW	11/16	5/8
3	2	2	LW	11/16	13/16
3	2	2	NW	11/16	13/16
3	3	3	LW	11/16	1-1/4
3	3	3	NW	11/16	1-1/4
4	4	4	LW	1-7/16	1-5/8
4	4	4	NW	1-7/16	1-13/16

++ When 1.5 in. deep steel floor units are used thickness of SFRM in crests shall be a min. of 1/2in.

The thickness of Spray-Applied Fire Resistive Materials shown in the table below are applicable when the thickness applied to the beams lower flange edges is reduced by one-half and the beams are supporting solid concrete slabs or floor assemblies containing only fluted floor or form units.

W8x28 Half Flange Beam Thickness					
Restrained Assembly	**Unrestrained Assembly**	**Unrestrained Beam**	**Concrete**	**Deck++**	**Half Flange Beam Thickness**
1	1	1	LW	3/8	3/8+
1	1	1	NW	3/8	1/2
1-1/2	1	1	LW	3/8	3/8+
1-1/2	1	1	NW	3/8	1/2
1-1/2	1-1/2	1-1/2	LW	3/8	9/16
1-1/2	1-1/2	1-1/2	NW	3/8	3/4
2	1	1	LW	3/8	3/8+
2	1	1	NW	3/8	1/2
2	2	2	LW	3/8	13/16
2	2	2	NW	3/8	1
3	1-1/2	1-1/2	LW	11/16	9/16
3	1-1/2	1-1/2	NW	11/16	3/4
3	2	2	LW	11/16	13/16
3	2	2	NW	11/16	1
4	4	4	LW	1-7/16	1-15/16
4	4	4	NW	1-7/16	2-1/8

+ Thickness applied to beams' lower flange edges shall be a min of 1/4 in.

++ When 1.5 in. deep steel floor units are used thickness of SFRM in crests shall be a min. of 1/2in.

SOUTHWEST FIREPROOFING PRODUCTS CO — Types 4, 5, 5EF, 5GP, 5MD, 7GP, 7HD, 8EF, 8GP, 8MD, 9EF, 9GP, 9MD.

*Bearing the UL Classification Mark